Wabtec CORPORATION

AUTO RACK
REPAIR PARTS CATALOG

rackparts@wabtec.com

Wabtec CORPORATION

DIRECTORY

Chocks

Bi-Level / p.1
Bi-Level Grate / p.2-3
Tri-Level / p.4
Hangers / p.5
Placards / p.6
Reconditioned / p.7-8
Sta-Put Parts / p.9-11
Tri-Level Repair Parts p.12-13
GLC Locking Tabs / p.14
Straps / p.15

EdgeGard

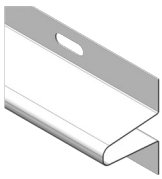

Standard Bi-Tri-Level / p.16-18
Multimax 19
Automax / p.20
AVC / p.21
Uni-Level / p.22
ABL / p.23
Chock Box / p.24

Side Screens

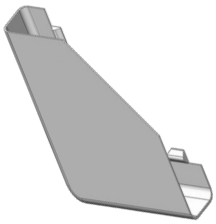

Edge Protector / p.25
Retainer - Anti-Theft / p.26

Bridge Plates

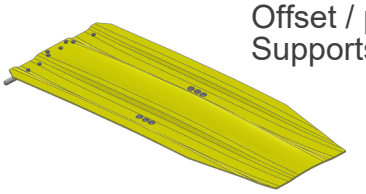

Plates / p.27-28
Offset / p. 29
Supports / p.30-33

Door Parts

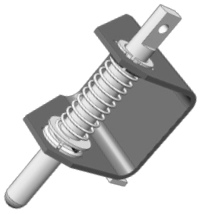

Cable Assemblies / p.34-35
Guides & Components / p.36-37
Locks, Hasps & Components / p.38-43
Pivot Bolt Assys./Stabilizers /p.44-45
Roller Assys. & Components /p.46-50
Tracks & Components / p.51-52
Misc. Assys. & Components /p.53-54

Door Parts By Door Type

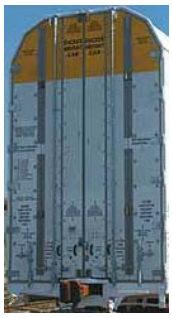

Rave Door / p.55-59
Composite Tri-Fold / 60-64
AVC Door / p.65-66

Deck Parts

Hinged Deck / p.67-69
Plugs / p.70

Tools & Mechanical

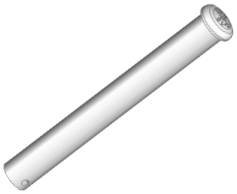

Tools / p.71
Mechanical / p.72-73
Coupler Shank Filler / p.74

Advanced Search ➡

CHOCKS ► BI-LEVEL

Sta-Put Chock - Red

P/N: ZT-625-RED

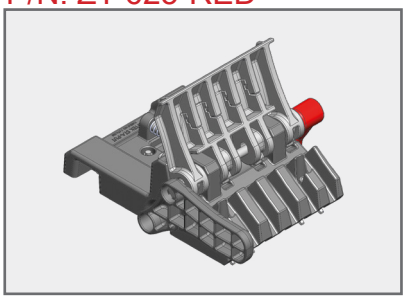

CODES	
AAR JOB	6056
GROUP	K
QUALIFIER	1
CONDITION	1
PART CODE	XCE

X-REF	

Sta-Put Chock - Green

P/N: ZT-625-GRN

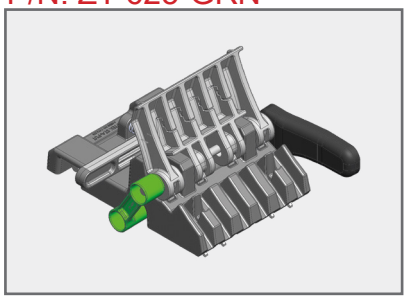

CODES	
AAR JOB	6056
GROUP	K
QUALIFIER	1
CONDITION	1
PART CODE	XCF

X-REF	

CHOCKS ► BI-LEVEL GRATE

Grate
P/N: ZT-800-75

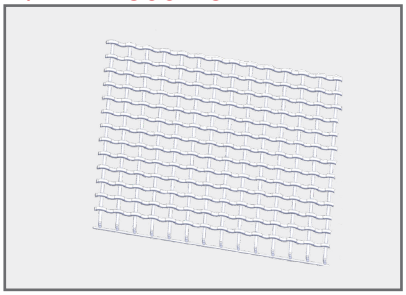

CODES	
AAR JOB	6072
GROUP	
QUALIFIER	
CONDITION	1
PART CODE	
X-REF	GLC-6000 74314

75” lg. (Other Sizes Available- 87”, 67.5”, 66”, 61.5”, 55.5”, 51”, 49.5”, 48”, 45”, 43.5”, 37.5”, 36”, 30”, 24”, 22.5”)

Grate, B-Deck w/ Flip-Up Barrel Rings
P/N: ZT-801-BL/AR

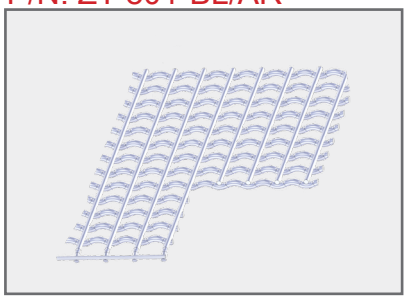

CODES	
AAR JOB	6072
GROUP	
QUALIFIER	
CONDITION	1
PART CODE	
X-REF	

Grate, B-Deck w/ Flip-Up Barrel Rings
P/N: ZT-801-BR/AL

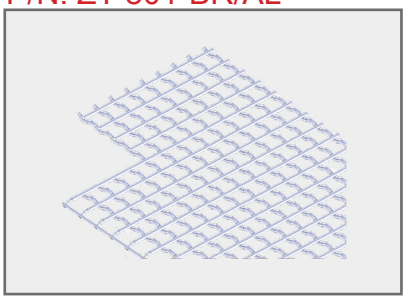

CODES	
AAR JOB	6072
GROUP	
QUALIFIER	
CONDITION	1
PART CODE	
X-REF	

Grate
P/N: ZT-800-150-KIT

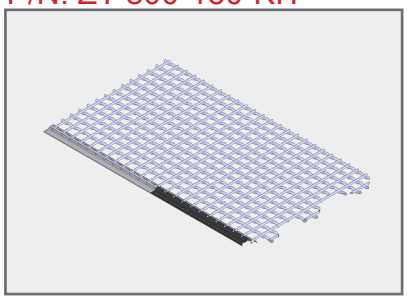

CODES	
AAR JOB	6072
GROUP	
QUALIFIER	
CONDITION	1
PART CODE	
X-REF	

150” lg. (2-75” Grates) w/ Hinges Applied

Grate-Top Hinge
P/N: ZT-798-37.5

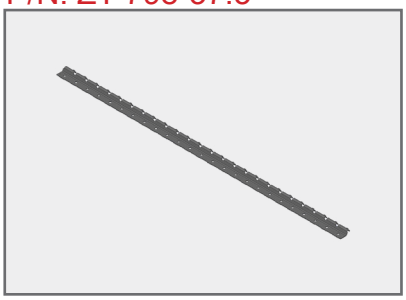

CODES	
AAR JOB	6075
GROUP	
QUALIFIER	
CONDITION	1
PART CODE	
X-REF	GLC-6002 74313

37-1/2” lg. (Other Sizes Available- 36”, 33”, 31.5”, 30”, 28.5”, 27”, 24”, 22.5”, 21”, 19.5”, 18”, 16.5”, 15”)

Grate-Bottom Hinge
P/N: ZT-797-37.5

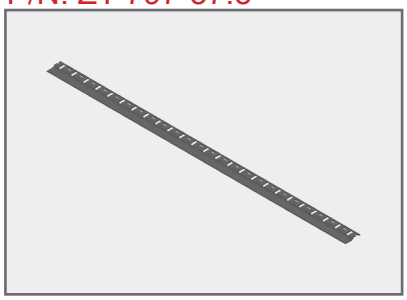

CODES	
AAR JOB	6075
GROUP	
QUALIFIER	
CONDITION	1
PART CODE	
X-REF	GLC-6001 74312

37-1/2” lg. (Other Sizes Available- 36”, 33”, 31.5”, 30”, 28.5”, 27”, 24”, 22.5”, 21”, 19.5”, 18”, 16.5”, 15”)

Grate Spacer
P/N: ZT-766

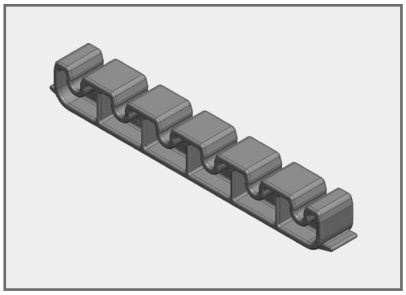

CODES	
AAR JOB	6499
GROUP	
QUALIFIER	
CONDITION	1
PART CODE	XBC
X-REF	

Grate, Hinge Shim
P/N: ZT-767-02

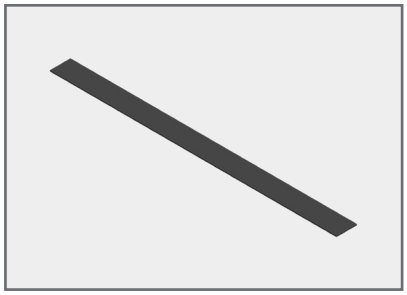

CODES	
AAR JOB	6499
GROUP	
QUALIFIER	
CONDITION	1
PART CODE	XBC
X-REF	

2-1/2” -36” lg. 1/4” -Thick

CHOCKS ► BI-LEVEL GRATE

Grate, Hinge Shim

P/N: ZT-767-03

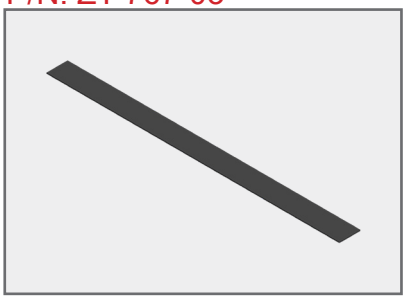

CODES	
AAR JOB	6499
GROUP	
QUALIFIER	
CONDITION	1
PART CODE	XBC

X-REF	

2” -36” lg. 1/8” -Thick

Bi-Level Grate, Huck/Rivet

P/N: SCMLS-R8-E12.6

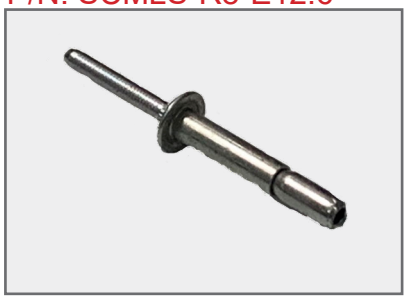

CODES	
AAR JOB	6499
GROUP	
QUALIFIER	
CONDITION	1
PART CODE	XBD

X-REF	
	GLC-2040

1200-pcs. per box

Grate Retainer

P/N: ZT-1011

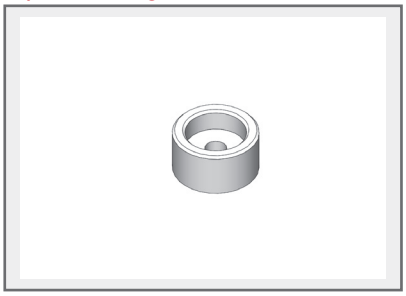

CODES	
AAR JOB	6499
GROUP	
QUALIFIER	
CONDITION	1
PART CODE	XBC

X-REF	

CHOCKS ▶ TRI-LEVEL

LoPro II Polymer Chock
P/N: 6400-R

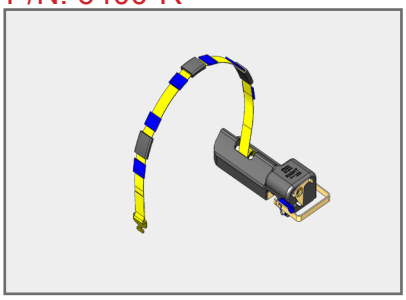

CODES	
AAR JOB	6054
GROUP	D
QUALIFIER	3
CONDITION	1
PART CODE	XCB
X-REF	

Active w/ Cleat Strap

LoPro II Polymer Chock
P/N: 6400-L

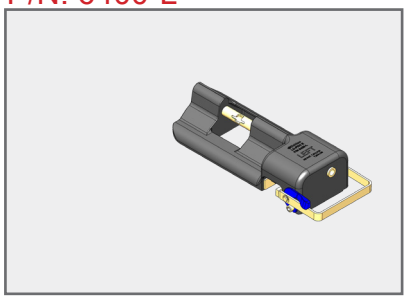

CODES	
AAR JOB	6054
GROUP	D
QUALIFIER	3
CONDITION	1
PART CODE	XCC
X-REF	

Anchor

Hybrid LoPro Steel Chock
P/N: ZT-780-L

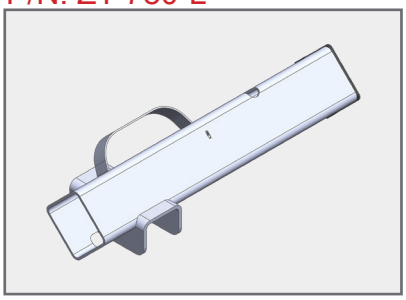

CODES	
AAR JOB	6054
GROUP	D
QUALIFIER	1
CONDITION	1
PART CODE	XCC
X-REF	

Anchor

Hybrid LoPro Steel Chock
P/N: ZT-780-R

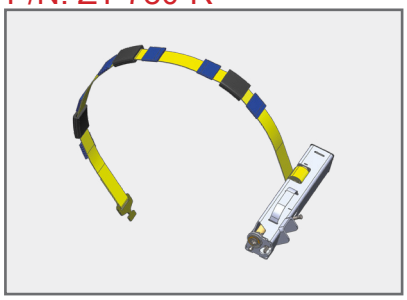

CODES	
AAR JOB	6054
GROUP	D
QUALIFIER	1
CONDITION	1
PART CODE	XCB
X-REF	

Active w/ Cleat Strap

Sta-Put Chock
P/N: ZT-625-RED-FX

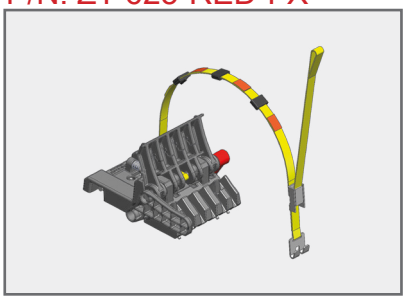

CODES	
AAR JOB	6057
GROUP	P
QUALIFIER	2
CONDITION	1
PART CODE	XCE
X-REF	

w/ Strap

Sta-Put Chock
P/N: ZT-625-GRN-FX

CODES	
AAR JOB	6057
GROUP	P
QUALIFIER	2
CONDITION	1
PART CODE	XCF
X-REF	

w/ Strap

CHOCKS ▶ HANGERS

Grate Lock Chock - Storage Pan Rod
P/N: ZT-873

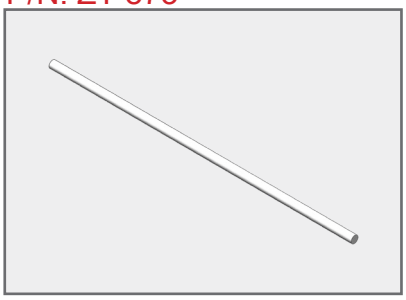

CODES	
AAR JOB	6499
GROUP	
QUALIFIER	
CONDITION	1
PART CODE	XCA
X-REF	GLC3082SS

Universal Sidescreen Storage Device Kit
P/N: ZT-642-KIT

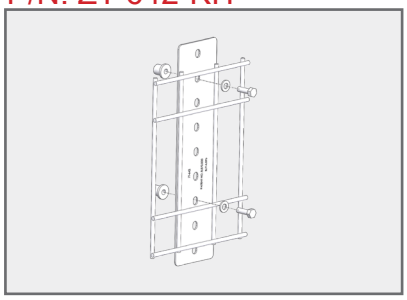

CODES	
AAR JOB	6065
GROUP	
QUALIFIER	
CONDITION	1
PART CODE	
X-REF	

Fastener Assy.
P/N: ZT-648-AS

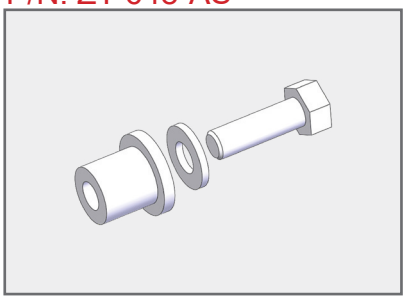

CODES	
AAR JOB	6499
GROUP	
QUALIFIER	
CONDITION	1
PART CODE	XCA
X-REF	GLC-5013

Chock Hanger Well Nut
P/N: ZT-666-02

CODES	
AAR JOB	6499
GROUP	
QUALIFIER	
CONDITION	1
PART CODE	XCA
X-REF	

LoPro Polymer Chock Hanger Kit
P/N: ZT-821-KIT

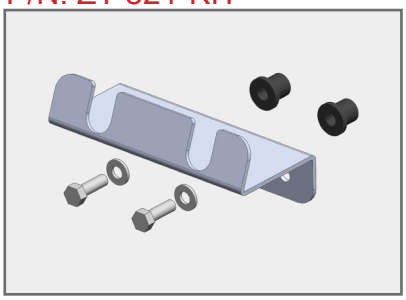

CODES	
AAR JOB	6066
GROUP	
QUALIFIER	
CONDITION	1
PART CODE	
X-REF	

Sta-Put Chock Strap Hanger Assy.
P/N: ZT-658-AS

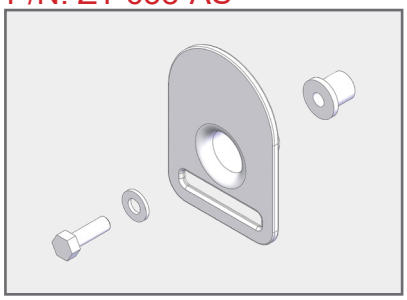

CODES	
AAR JOB	6499
GROUP	
QUALIFIER	
CONDITION	1
PART CODE	XCA
X-REF	

TTM Hanger
P/N: M-999-7156

CODES	
AAR JOB	6066
GROUP	
QUALIFIER	
CONDITION	1
PART CODE	
X-REF	

CHOCKS ▶ PLACARDS

Sta-Put w/ Strap
P/N: ZT-643-01-KIT

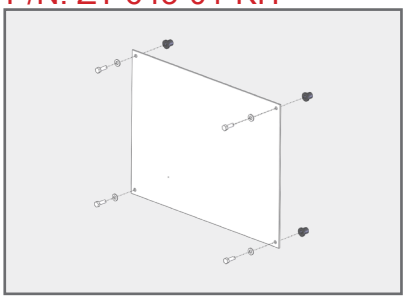

CODES	
AAR JOB	6499
GROUP	P
QUALIFIER	2
CONDITION	1
PART CODE	XZD
X-REF	

Application/Instructional

Sta-Put No Strap
P/N: ZT-643-02-KIT

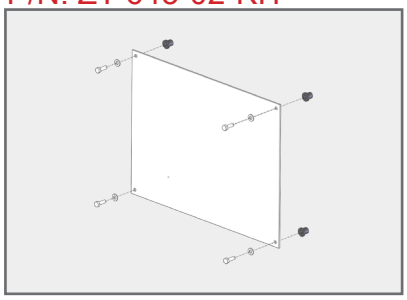

CODES	
AAR JOB	6499
GROUP	K
QUALIFIER	1
CONDITION	1
PART CODE	XZD
X-REF	

Application/Instructional

Sta-Put, Automax No Strap
P/N: ZT-643-03-KIT

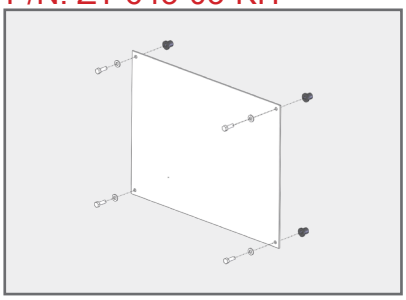

CODES	
AAR JOB	6499
GROUP	
QUALIFIER	
CONDITION	
PART CODE	XZD
X-REF	

Application/Instructional

LoPro
P/N: ZT-644-01-KIT

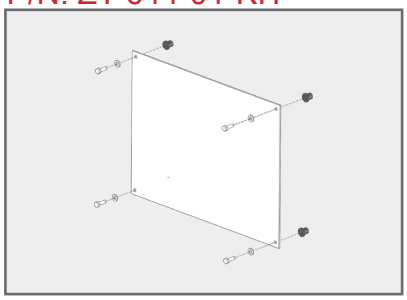

CODES	
AAR JOB	6499
GROUP	C
QUALIFIER	1
CONDITION	1
PART CODE	XZD
X-REF	

Application/Instructional

LoPro, Automax
P/N: ZT-644-03-KIT

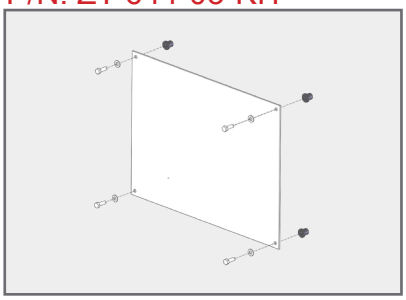

CODES	
AAR JOB	6499
GROUP	C
QUALIFIER	1
CONDITION	1
PART CODE	XZD
X-REF	

Application/Instructional

Hybrid
P/N: ZT-646-02-KIT

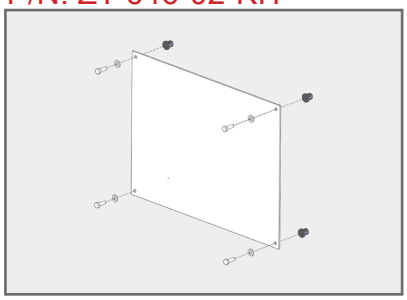

CODES	
AAR JOB	6499
GROUP	D
QUALIFIER	1
CONDITION	1
PART CODE	XZD
X-REF	

Application/Instructional

CHOCKS ► RECONDITIONED

LoPro II Polymer Chock
P/N: 6400-LII-R

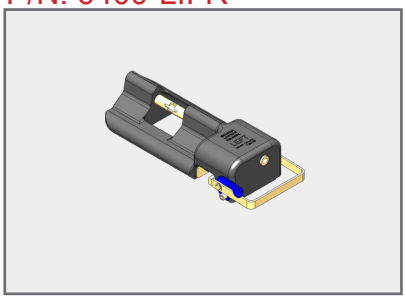

CODES	
AAR JOB	6054
GROUP	D
QUALIFIER	3
CONDITION	3
PART CODE	
X-REF	

Anchor

LoPro II Polymer Chock
P/N: 6400-RII-R

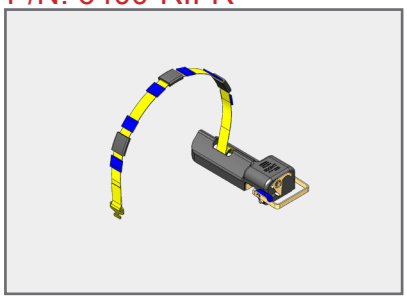

CODES	
AAR JOB	6054
GROUP	D
QUALIFIER	3
CONDITION	3
PART CODE	
X-REF	

Active w/ Cleat Strap

Hybrid Steel LoPro
P/N: ZT-780-L-R

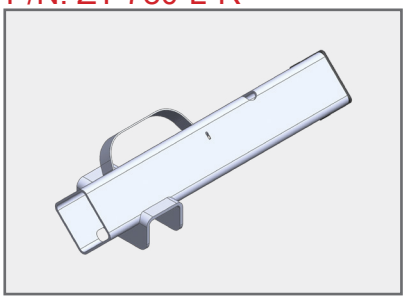

CODES	
AAR JOB	6054
GROUP	D
QUALIFIER	1
CONDITION	3
PART CODE	
X-REF	

Anchor

Hybrid Steel LoPro
P/N: ZT-780-R-R

CODES	
AAR JOB	6054
GROUP	D
QUALIFIER	1
CONDITION	3
PART CODE	
X-REF	

Active w/ Cleat Strap

Grate Lock Chock
P/N: DE47001

CODES	
AAR JOB	6055
GROUP	J
QUALIFIER	1
CONDITION	3
PART CODE	
X-REF	GLC-7026R

Red

Grate Lock Chock
P/N: DE47000

CODES	
AAR JOB	6055
GROUP	J
QUALIFIER	1
CONDITION	3
PART CODE	
X-REF	GLC-7027R

Green

CHOCKS ► RECONDITIONED

Sta-Put Chock
P/N: ZT-625-RED-R

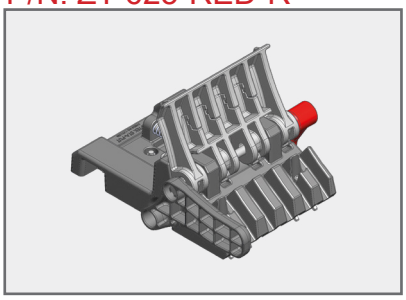

CODES	
AAR JOB	6056
GROUP	K
QUALIFIER	1
CONDITION	3
PART CODE	
X-REF	

Sta-Put Chock
P/N: ZT-625-GRN-R

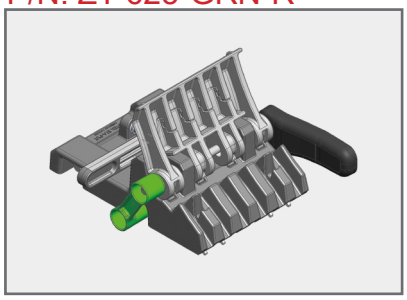

CODES	
AAR JOB	6056
GROUP	K
QUALIFIER	1
CONDITION	3
PART CODE	
X-REF	

Sta-Put Chock
P/N: ZT-625-RED-FX-R

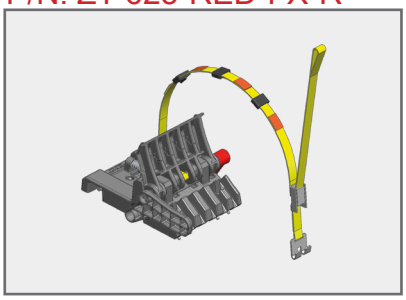

CODES	
AAR JOB	6057
GROUP	P
QUALIFIER	2
CONDITION	3
PART CODE	
X-REF	

w/ Strap (Tri-Level)

Sta-Put Chock
P/N: ZT-625-GRN-FX-R

CODES	
AAR JOB	6057
GROUP	P
QUALIFIER	2
CONDITION	3
PART CODE	
X-REF	

w/ Strap (Tri-Level)

CHOCKS ► STA-PUT REPAIR PARTS

Faceplate - High Position
P/N: ZT-1006

CODES	
AAR JOB	6050
GROUP	K
QUALIFIER	1
CONDITION	1
PART CODE	
X-REF	

Faceplate - Medium Position
P/N: ZT-1007

CODES	
AAR JOB	6050
GROUP	K
QUALIFIER	1
CONDITION	1
PART CODE	
X-REF	

HHCS
P/N: ZT-457-10

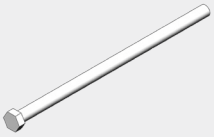

CODES	
AAR JOB	6050
GROUP	K
QUALIFIER	1
CONDITION	1
PART CODE	
X-REF	

1/2”-13 x 10

HHCS
P/N: ZT-457-7

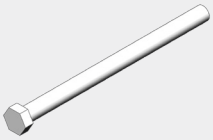

CODES	
AAR JOB	6050
GROUP	K
QUALIFIER	1
CONDITION	1
PART CODE	
X-REF	

1/2”-13 x 7

Nylon Insert Lock Nut
P/N: ZT-568-12

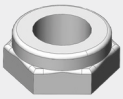

CODES	
AAR JOB	6050
GROUP	K
QUALIFIER	1
CONDITION	1
PART CODE	
X-REF	

1/2”-13

Washer
P/N: ZT-639-12

CODES	
AAR JOB	6050
GROUP	K
QUALIFIER	1
CONDITION	1
PART CODE	
X-REF	

1/2”

Lateral Restraint
P/N: ZT-630-RED

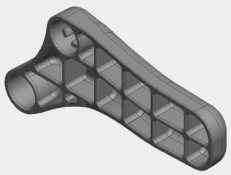

CODES	
AAR JOB	6050
GROUP	K
QUALIFIER	1
CONDITION	1
PART CODE	
X-REF	

Lateral Restraint
P/N: ZT-630-GRN

CODES	
AAR JOB	6050
GROUP	K
QUALIFIER	1
CONDITION	1
PART CODE	
X-REF	

CHOCKS ► STA-PUT REPAIR PARTS

Side Handle
P/N: ZT-631-RED

CODES	
AAR JOB	6050
GROUP	K
QUALIFIER	1
CONDITION	1
PART CODE	
X-REF	

Side Handle
P/N: ZT-631-GRN

CODES	
AAR JOB	6050
GROUP	K
QUALIFIER	1
CONDITION	1
PART CODE	
X-REF	

HHCS
P/N: ZT-458-1

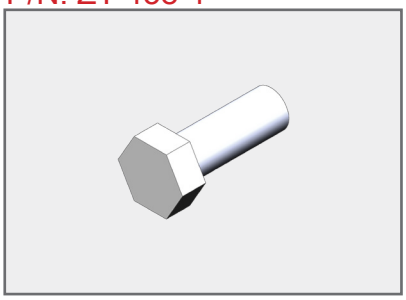

CODES	
AAR JOB	6050
GROUP	K
QUALIFIER	1
CONDITION	1
PART CODE	
X-REF	CD101002

3/8”-16 x 1

Nylon Insert Lock Nut
P/N: ZT-568-38

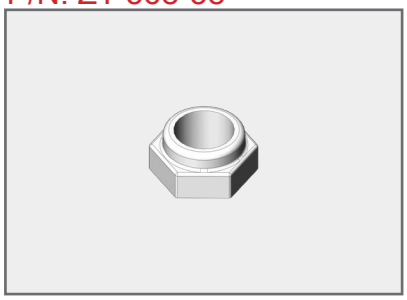

CODES	
AAR JOB	6050
GROUP	K
QUALIFIER	1
CONDITION	1
PART CODE	
X-REF	55100 PCC107003

3/8”-16

Washer
P/N: ZT-639-38

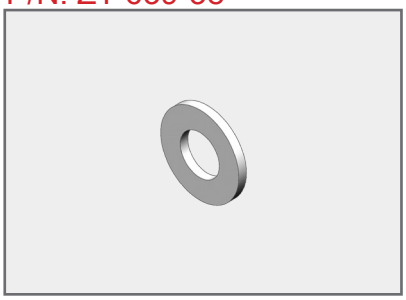

CODES	
AAR JOB	6050
GROUP	K
QUALIFIER	1
CONDITION	1
PART CODE	
X-REF	

3/8”

Latching Release Lever
P/N: ZT-632

CODES	
AAR JOB	6050
GROUP	K
QUALIFIER	1
CONDITION	1
PART CODE	
X-REF	

Latching Release Lever- Locking Pin
P/N: ZT-633

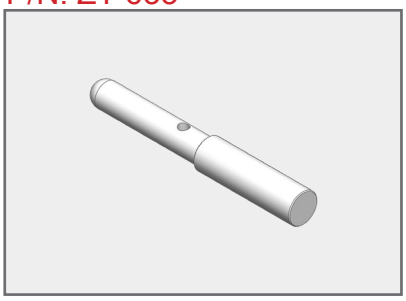

CODES	
AAR JOB	6050
GROUP	K
QUALIFIER	1
CONDITION	1
PART CODE	
X-REF	

Latching Release Lever- Spring
P/N: ZT-634

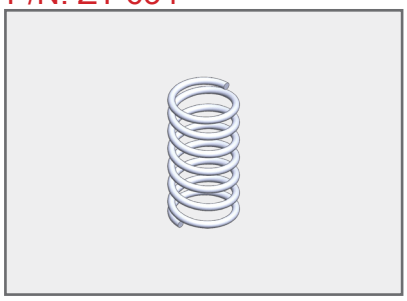

CODES	
AAR JOB	6050
GROUP	K
QUALIFIER	1
CONDITION	1
PART CODE	
X-REF	

CHOCKS ► STA-PUT REPAIR PARTS

Latching Release Lever- Pivot Ball
P/N: ZT-635

CODES	
AAR JOB	6050
GROUP	K
QUALIFIER	1
CONDITION	1
PART CODE	
X-REF	

Front Teeth
P/N: ZT-649

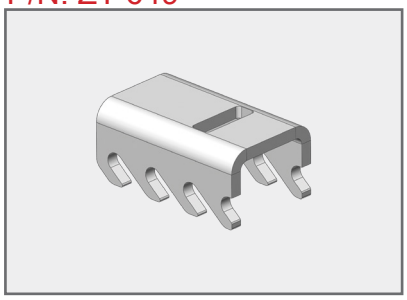

CODES	
AAR JOB	6050
GROUP	K
QUALIFIER	1
CONDITION	1
PART CODE	
X-REF	

Articulation Studs
P/N: ZT-636

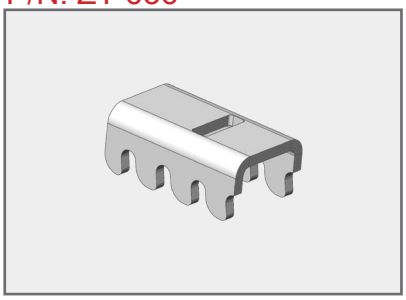

CODES	
AAR JOB	6050
GROUP	K
QUALIFIER	1
CONDITION	1
PART CODE	
X-REF	

Carriage Bolt
P/N: ZT-638-1

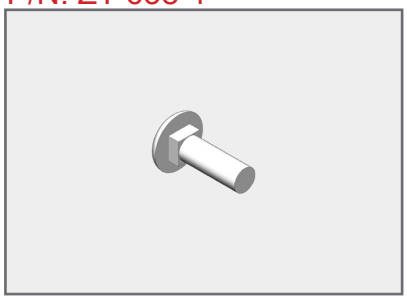

CODES	
AAR JOB	6050
GROUP	K
QUALIFIER	1
CONDITION	1
PART CODE	
X-REF	

5/16”-18 x 1” (25-pcs. per pkg.)

Nylon Insert Lock Nut
P/N: ZT-568-516

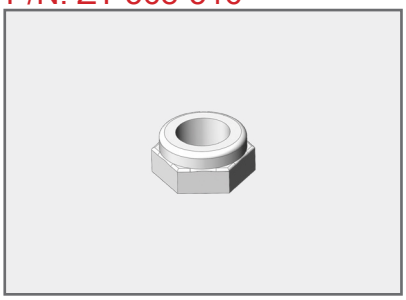

CODES	
AAR JOB	6050
GROUP	K
QUALIFIER	1
CONDITION	1
PART CODE	
X-REF	

5/16” -18 (25-pcs. per pkg.)

Washer
P/N: ZT-639-516

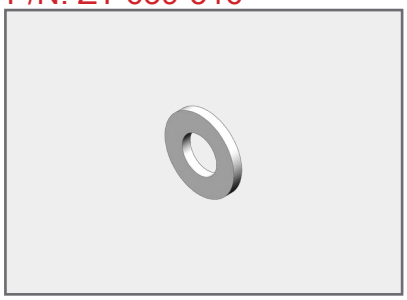

CODES	
AAR JOB	6050
GROUP	K
QUALIFIER	1
CONDITION	1
PART CODE	
X-REF	

5/16” (25-pcs. per pkg.)

CHOCKS ► TRI-LEVEL REPAIR PARTS

LoPro Blue Locking Lever Tab
P/N: 5480

CODES	
AAR JOB	6050
GROUP	C
QUALIFIER	1
CONDITION	1
PART CODE	
X-REF	CCP5480

LoPro Locking Handle E-Clip
P/N: 5494

CODES	
AAR JOB	6050
GROUP	C
QUALIFIER	1
CONDITION	1
PART CODE	
X-REF	

Foot Release E-Clip
P/N: 5636

CODES	
AAR JOB	6050
GROUP	C
QUALIFIER	1
CONDITION	1
PART CODE	
X-REF	

LoPro Locking Handle
P/N: 6404

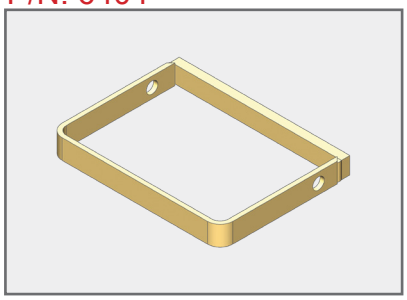

CODES	
AAR JOB	6050
GROUP	C
QUALIFIER	1
CONDITION	1
PART CODE	
X-REF	

LoPro Locking Handle Shaft
P/N: 6406

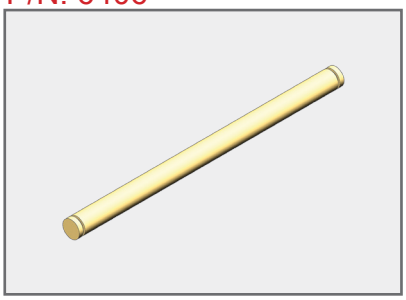

CODES	
AAR JOB	6050
GROUP	C
QUALIFIER	1
CONDITION	1
PART CODE	
X-REF	

Hybrid Locking Lever Handle E-Clip
P/N: ZT-812

CODES	
AAR JOB	6050
GROUP	D
QUALIFIER	1
CONDITION	1
PART CODE	
X-REF	

Hybrid Protective End Cap
P/N: ZT-779

CODES	
AAR JOB	6050
GROUP	D
QUALIFIER	1
CONDITION	1
PART CODE	
X-REF	

Hybrid Spacer/E-Clip Retainer
P/N: ZT-778

CODES	
AAR JOB	6050
GROUP	D
QUALIFIER	1
CONDITION	1
PART CODE	
X-REF	

CHOCKS ► TRI-LEVEL REPAIR PARTS

Chock Spring
P/N: ZT-782

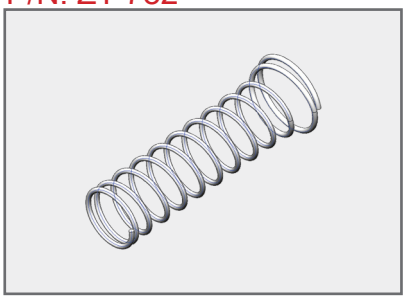

CODES	
AAR JOB	6050
GROUP	D
QUALIFIER	1
CONDITION	1
PART CODE	

X-REF	

Chock Track Locking Pin
P/N: ZT-781

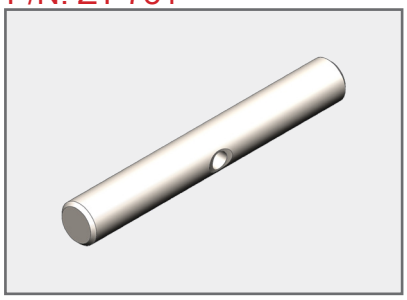

CODES	
AAR JOB	6050
GROUP	D
QUALIFIER	1
CONDITION	1
PART CODE	

X-REF	

Hybrid Strap Handle
P/N: ZT-811

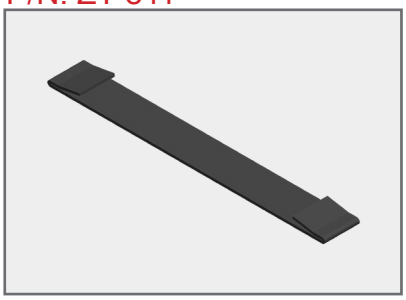

CODES	
AAR JOB	6050
GROUP	D
QUALIFIER	1
CONDITION	1
PART CODE	

X-REF	

Hybrid Locking Lever Handle
P/N: ZT-784

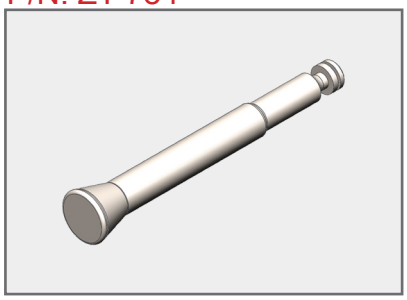

CODES	
AAR JOB	6050
GROUP	D
QUALIFIER	1
CONDITION	1
PART CODE	

X-REF	

CHOCKS ► GLC LOCKING TABS

Locking Lever Retainer/Tab
P/N: DE47021

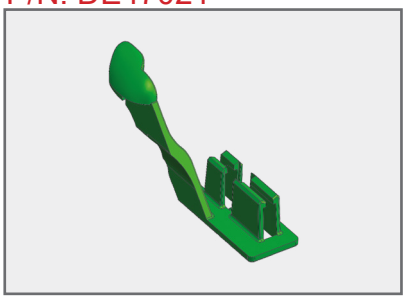

CODES	
AAR JOB	6050
GROUP	J
QUALIFIER	1
CONDITION	1
PART CODE	

X-REF	
	GLC-3085

Green

Locking Lever Retainer/Tab
P/N: DE47024

CODES	
AAR JOB	6050
GROUP	J
QUALIFIER	1
CONDITION	1
PART CODE	

X-REF	
	GLC-3084

Red

CHOCKS ► STRAPS

Sta-Put Chock Strap
P/N: ZT-654-FXRP

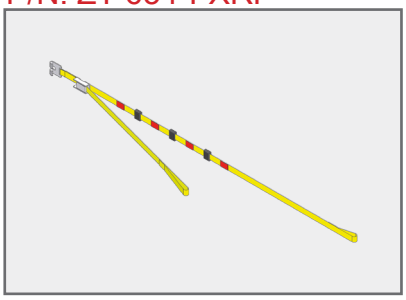

CODES	
AAR JOB	6050
GROUP	P
QUALIFIER	2
CONDITION	1
PART CODE	
X-REF	

(UP Autoflex - No Bolt Removal)

LoPro Chock Strap
P/N: 6440

CODES	
AAR JOB	6050
GROUP	C
QUALIFIER	1
CONDITION	1
PART CODE	
X-REF	

Hybrid & LoPro II Chock Strap
P/N: ZT-809-01

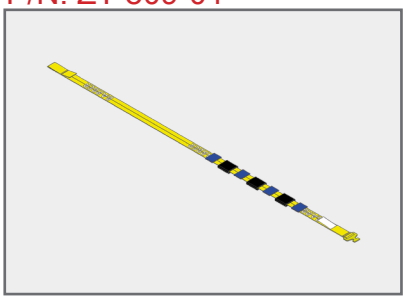

CODES	
AAR JOB	6050
GROUP	D
QUALIFIER	1
CONDITION	1
PART CODE	
X-REF	

Pull Through' Cleat Strap
P/N: 5651

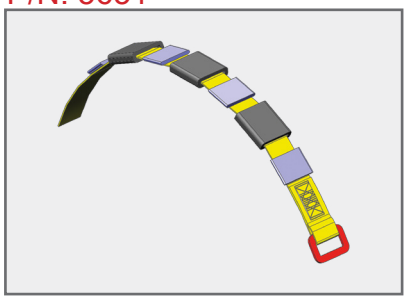

CODES	
AAR JOB	6050
GROUP	A
QUALIFIER	1
CONDITION	1
PART CODE	
X-REF	39425.04

J-Hook Strap
P/N: 5652

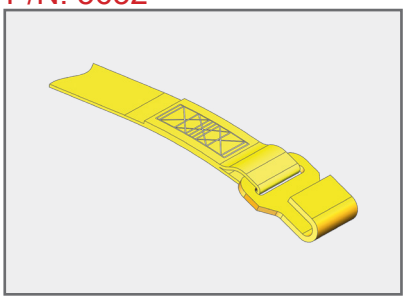

CODES	
AAR JOB	6050
GROUP	A
QUALIFIER	1
CONDITION	1
PART CODE	
X-REF	69425.03

TRG TTM Securement Strap
P/N: 214-42717

CAN BE PROVIDED UPON REQUEST

CODES	
AAR JOB	6050
GROUP	D
QUALIFIER	1
CONDITION	1
PART CODE	
X-REF	

EDGEGARD ► STANDARD BI-TRI

EdgeGard II Bi-Level Kit
P/N: 8D-705-G2

CAN BE PROVIDED UPON REQUEST

CODES	
AAR JOB	
GROUP	
QUALIFIER	
CONDITION	
PART CODE	
X-REF	75313-CS

EdgeGard II Tri-Level Kit
P/N: 8D-710-G2

CAN BE PROVIDED UPON REQUEST

CODES	
AAR JOB	
GROUP	
QUALIFIER	
CONDITION	
PART CODE	
X-REF	

EdgeGard II Side Screen Profile-100”
P/N: ZT-575-100

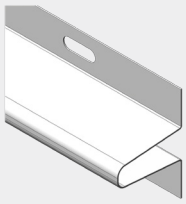

CODES	
AAR JOB	6080
GROUP	
QUALIFIER	2
CONDITION	1
PART CODE	
X-REF	75028

EdgeGard II Side Screen Profile-94”
P/N: ZT-575-94

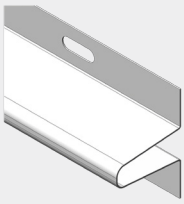

CODES	
AAR JOB	6080
GROUP	
QUALIFIER	2
CONDITION	1
PART CODE	
X-REF	101812-24 75027

Multi-Max, Aero Side Screens

EdgeGard II Side Screen Profile - 64”
P/N: ZT-575-64

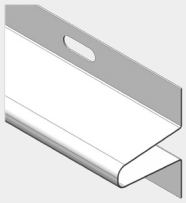

CODES	
AAR JOB	6081
GROUP	
QUALIFIER	2
CONDITION	1
PART CODE	
X-REF	75090

EdgeGard II Post Strap - 8”
P/N: ZT-251-8

CODES	
AAR JOB	6082
GROUP	
QUALIFIER	2
CONDITION	1
PART CODE	
X-REF	

EdgeGard II Post Strap - 16”
P/N: ZT-251-16

CODES	
AAR JOB	6082
GROUP	
QUALIFIER	2
CONDITION	1
PART CODE	
X-REF	101812-07

EdgeGard II Post Strap - 23”
P/N: ZT-251-23

CODES	
AAR JOB	6082
GROUP	
QUALIFIER	2
CONDITION	1
PART CODE	
X-REF	101812-09

EDGEGARD ► STANDARD BI-TRI

EdgeGard II Post Strap - 30”
P/N: ZT-251-30

CODES	
AAR JOB	6081
GROUP	
QUALIFIER	2
CONDITION	1
PART CODE	
X-REF	

EdgeGard II Post Strap - 37”
P/N: ZT-251-37

CODES	
AAR JOB	6081
GROUP	
QUALIFIER	2
CONDITION	1
PART CODE	
X-REF	

EdgeGard II Post Strap - 45”
P/N: ZT-251-45

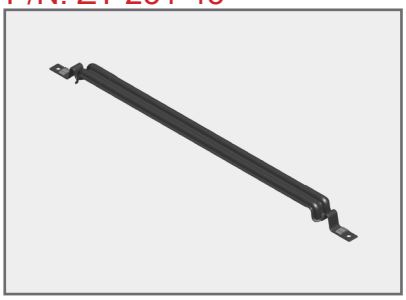

CODES	
AAR JOB	6081
GROUP	
QUALIFIER	2
CONDITION	1
PART CODE	
X-REF	

C-Deck Roof Profile
P/N: ZT-186

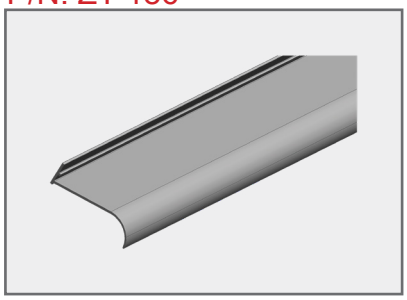

CODES	
AAR JOB	6083
GROUP	
QUALIFIER	2
CONDITION	1
PART CODE	
X-REF	

79’ 4”

Push-In Fastener
P/N: ZT-176-50

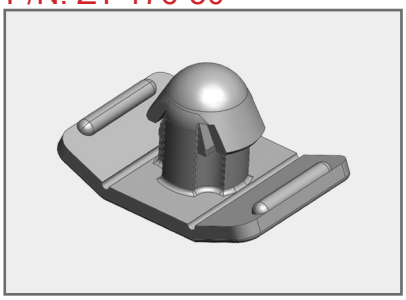

CODES	
AAR JOB	6086
GROUP	
QUALIFIER	2
CONDITION	1
PART CODE	
X-REF	101812-01 PN2736

50-pcs. per bag

Roof Clip
P/N: ZT-249-100

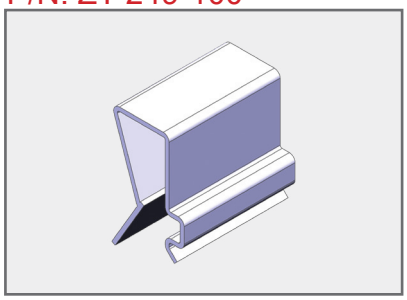

CODES	
AAR JOB	6087
GROUP	
QUALIFIER	2
CONDITION	1
PART CODE	
X-REF	SM100097

100-pcs. per bag

Foam Tape
P/N: ZT-219

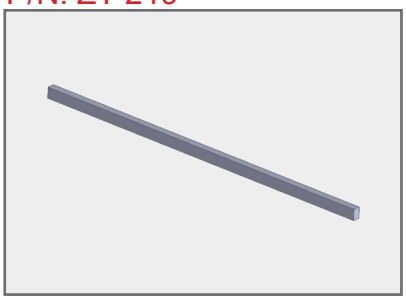

CODES	
AAR JOB	6084
GROUP	
QUALIFIER	2
CONDITION	1
PART CODE	
X-REF	

100” x 3” Wide x 2” Thick Strip

Foam Pad
P/N: ZT-220

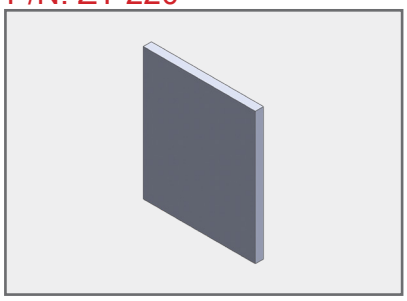

CODES	
AAR JOB	6085
GROUP	
QUALIFIER	2
CONDITION	1
PART CODE	
X-REF	

8.5” x 10” x 5/8” Thick

EDGEGARD ► STANDARD BI-TRI

Foam Tape
P/N: ZT-220-4.5x26

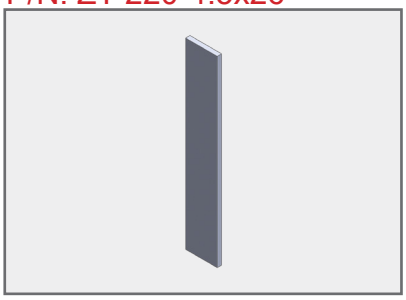

CODES	
AAR JOB	6084
GROUP	
QUALIFIER	2
CONDITION	1
PART CODE	

X-REF	

26” x 4.5” Strip x 5/8” Thick

Foam Tape
P/N: ZT-189-66

CODES	
AAR JOB	6084
GROUP	
QUALIFIER	2
CONDITION	1
PART CODE	

X-REF	

66” x 2” Wide x 5/8” Thick

Foam Tape
P/N: ZT-189

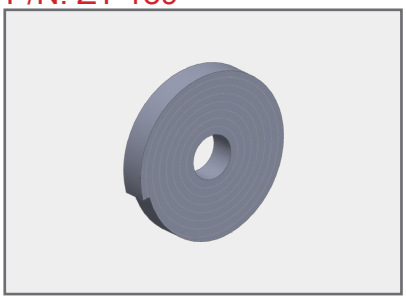

CODES	
AAR JOB	6084
GROUP	
QUALIFIER	2
CONDITION	1
PART CODE	

X-REF	

17’ x 2” Wide x 5/8” Thick

Roof Profile
P/N: ZT-992-100

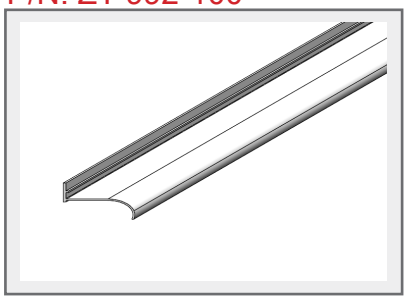

CODES	
AAR JOB	
GROUP	
QUALIFIER	
CONDITION	
PART CODE	

X-REF	

100” Long for Trinity Hourglass Bi-Level

EDGEGARD ► Multi-Max

Side Screen Profile
P/N: ZT-575-94

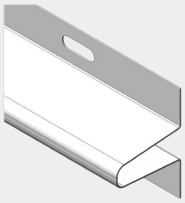

CODES	
AAR JOB	6080
GROUP	
QUALIFIER	2
CONDITION	1
PART CODE	

X-REF
101812-24 75027

Side Screen Profile
P/N: ZT-575-31

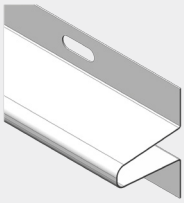

CODES	
AAR JOB	6081
GROUP	
QUALIFIER	2
CONDITION	1
PART CODE	

X-REF

Plastic Strap
P/N: ZT-251-4.5

CODES	
AAR JOB	6082
GROUP	
QUALIFIER	2
CONDITION	1
PART CODE	

X-REF

EDGEGARD ▶ AUTOMAX

Bumper Cover
P/N: ZT-741-05

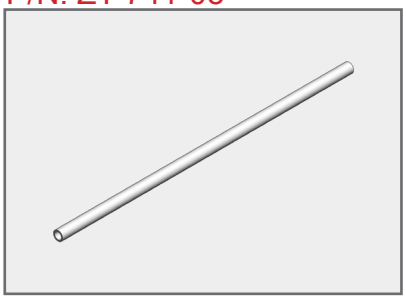

CODES	
AAR JOB	6081
GROUP	
QUALIFIER	2
CONDITION	1
PART CODE	XZE
X-REF	71765

31.5” lg. (Other Lengths Available)

Foam Pad
P/N: ZT-742

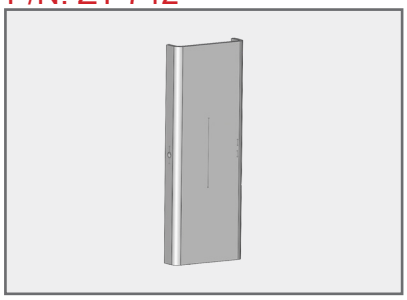

CODES	
AAR JOB	6082
GROUP	
QUALIFIER	2
CONDITION	1
PART CODE	XZE
X-REF	72363

6.5” x 19”

Foam Pad
P/N: ZT-743

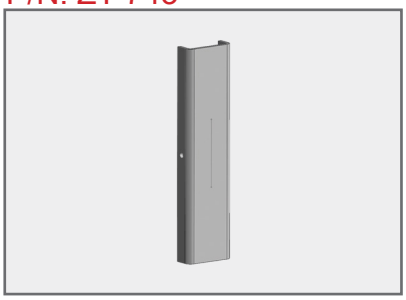

CODES	
AAR JOB	6082
GROUP	
QUALIFIER	2
CONDITION	1
PART CODE	XZE
X-REF	

4” x 19”

Foam Extrusion
P/N: ZT-744-01

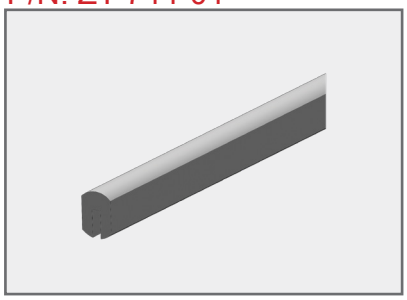

CODES	
AAR JOB	6081
GROUP	
QUALIFIER	2
CONDITION	1
PART CODE	XZE
X-REF	

36”

Foam Extrusion
P/N: ZT-744-15

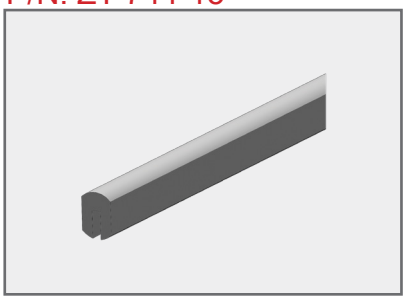

CODES	
AAR JOB	6080
GROUP	
QUALIFIER	2
CONDITION	1
PART CODE	XZE
X-REF	71479

40’ x 1”

Carline Pad
P/N: ZT-745

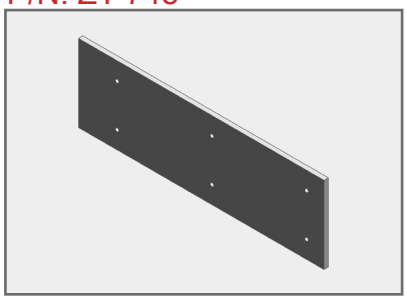

CODES	
AAR JOB	6082
GROUP	
QUALIFIER	2
CONDITION	1
PART CODE	XZE
X-REF	73992

5.5” x 17.5”

Side Door Lining
P/N: ZT-823-04

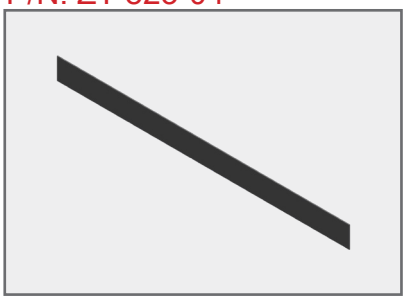

CODES	
AAR JOB	6080
GROUP	
QUALIFIER	2
CONDITION	1
PART CODE	XZE
X-REF	71878

(w/ Adhesive) 8” x 110”

Side Door Lining
P/N: ZT-823-02

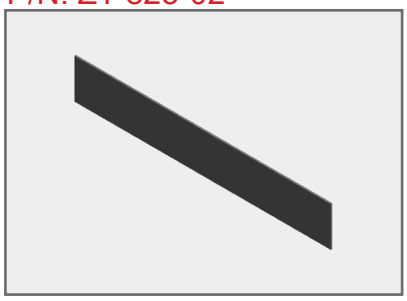

CODES	
AAR JOB	6081
GROUP	
QUALIFIER	2
CONDITION	1
PART CODE	XZE
X-REF	71647

(w/ Adhesive) 8” x 52”

EDGEGARD ► AVC

EdgeGard III FCA AVC Bi-Level
P/N: ZT-375

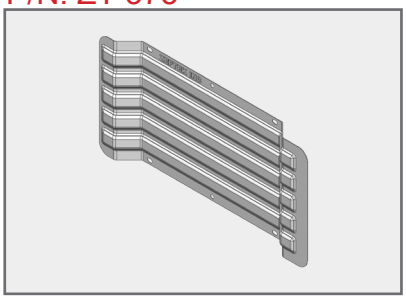

CODES	
AAR JOB	6081
GROUP	
QUALIFIER	2
CONDITION	1
PART CODE	XZD

X-REF	

EdgeGard III FCA AVC Bi-Level
P/N: ZT-373-76

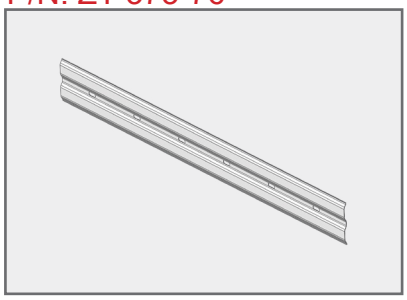

CODES	
AAR JOB	6081
GROUP	
QUALIFIER	2
CONDITION	1
PART CODE	XZD

X-REF	

Roof Profile

EDGEGARD ► UNI-LEVEL

EdgeGard III TTX Uni-level
P/N: ZT-375-50.5

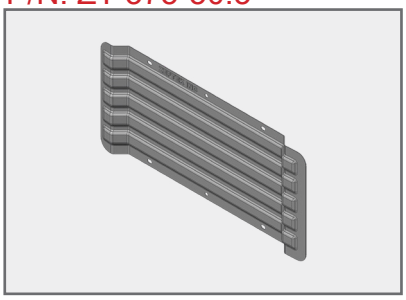

CODES	
AAR JOB	6081
GROUP	
QUALIFIER	2
CONDITION	1
PART CODE	XZD

X-REF	

(Top Row)

EdgeGard III TTX Uni-level
P/N: ZT-777

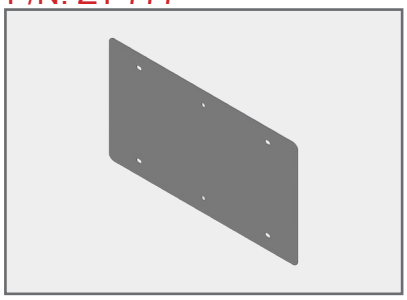

CODES	
AAR JOB	6081
GROUP	
QUALIFIER	2
CONDITION	1
PART CODE	XZD

X-REF	

Hole Cover (Bottom Row)

EdgeGard III TTX Uni-level
P/N: ZT-775-41

CODES	
AAR JOB	6081
GROUP	
QUALIFIER	2
CONDITION	1
PART CODE	XZD

X-REF	

(Bottom Row)

EDGEGARD ▶ ABL

EdgeGard III ABL
P/N: ZT-373-44

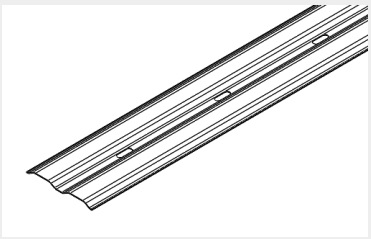

CODES	
AAR JOB	6081
GROUP	
QUALIFIER	2
CONDITION	1
PART CODE	XZD

X-REF	

EdgeGard III ABL
P/N: ZT-373-63.5

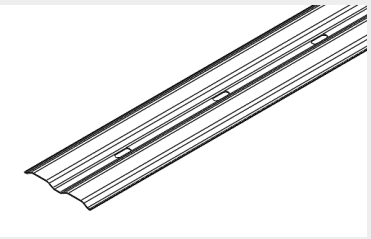

CODES	
AAR JOB	6081
GROUP	
QUALIFIER	2
CONDITION	1
PART CODE	XZD

X-REF	

EdgeGard III ABL
P/N: ZT-373-69

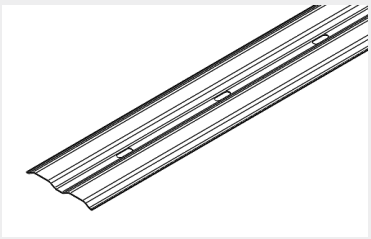

CODES	
AAR JOB	6081
GROUP	
QUALIFIER	2
CONDITION	1
PART CODE	XZD

X-REF	

EdgeGard III ABL
P/N: ZT-373-74.5

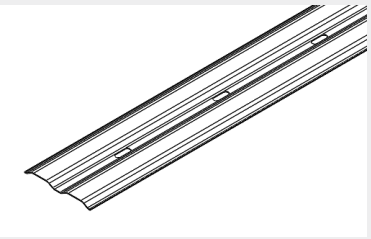

CODES	
AAR JOB	6081
GROUP	
QUALIFIER	2
CONDITION	1
PART CODE	XZD

X-REF	

EDGEGARD ► CHOCK BOX

Chock Box Protector

P/N: ZT-240

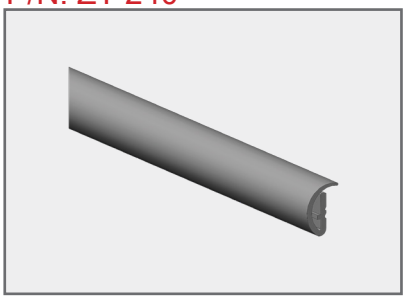

CODES	
AAR JOB	6081
GROUP	
QUALIFIER	2
CONDITION	1
PART CODE	XTA

X-REF	

Various lengths Available

Chock Box Protector, Kit

P/N: ZT-240-AS

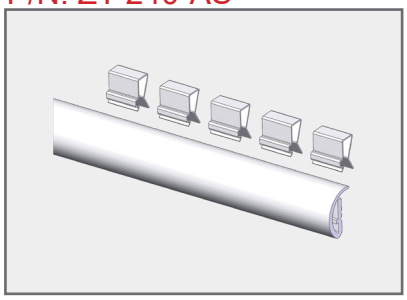

CODES	
AAR JOB	6081
GROUP	
QUALIFIER	2
CONDITION	1
PART CODE	XTA

X-REF	

Protector with 5-clips

SIDE SCREEN ► EDGE PROTECTOR

Sidescreen Corner Protector
P/N: ZT-150

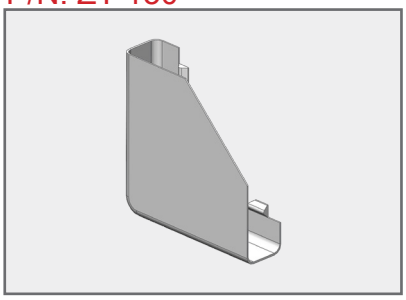

CODES	
AAR JOB	6552
GROUP	
QUALIFIER	
CONDITION	1
PART CODE	
X-REF	213-38133 PN2699

288-pcs. per box

Screen Protector
P/N: ZT-749-100

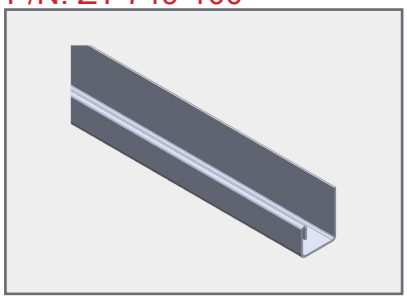

CODES	
AAR JOB	6499
GROUP	
QUALIFIER	
CONDITION	1
PART CODE	XRG
X-REF	PN2715.1

Top Screen 99”

Screen Protector
P/N: ZT-749-64

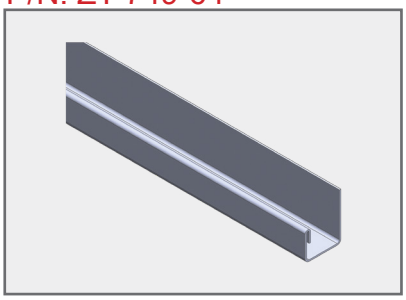

CODES	
AAR JOB	6499
GROUP	
QUALIFIER	
CONDITION	1
PART CODE	XRG
X-REF	PN2715.3

Top Screen 63”

Screen Protector
P/N: ZT-748-100

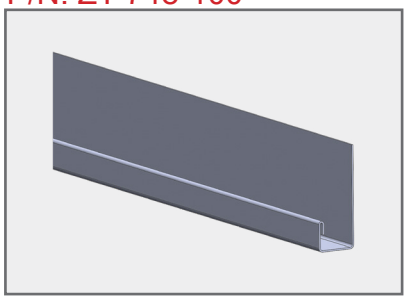

CODES	
AAR JOB	6499
GROUP	
QUALIFIER	
CONDITION	1
PART CODE	XRG
X-REF	

Bottom Screen 99”

Screen Protector
P/N: ZT-748-64

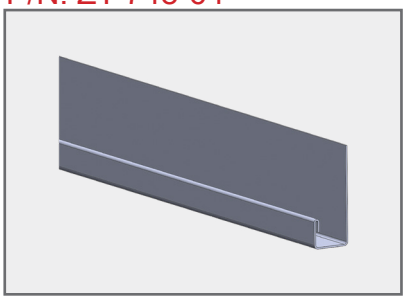

CODES	
AAR JOB	6499
GROUP	
QUALIFIER	
CONDITION	1
PART CODE	XRG
X-REF	

Bottom Screen 63”

Roof Wear Liner - 8’- 6”
P/N: ZT-209-01

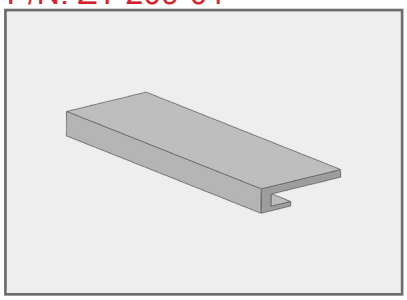

CODES	
AAR JOB	6499
GROUP	
QUALIFIER	
CONDITION	1
PART CODE	XRG
X-REF	

Roof Wear Liner - 3’- 2”
P/N: ZT-209-02

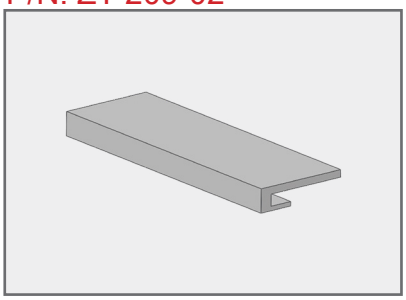

CODES	
AAR JOB	6499
GROUP	
QUALIFIER	
CONDITION	1
PART CODE	XRG
X-REF	

SIDE SCREEN ► RETAINER / ANTI-THEFT

Anti-Theft, Galvanized Steel
P/N: SM-1006

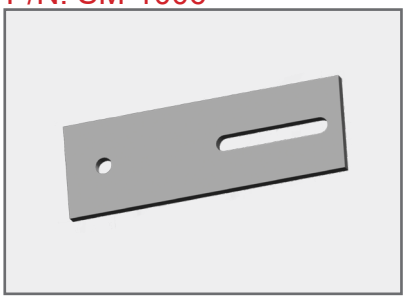

CODES	
AAR JOB	6541
GROUP	
QUALIFIER	
CONDITION	1
PART CODE	
X-REF	73618.12 M1050303

7/16”-Hole/Slot

Anti-Theft, Aluminum
P/N: SM-1010

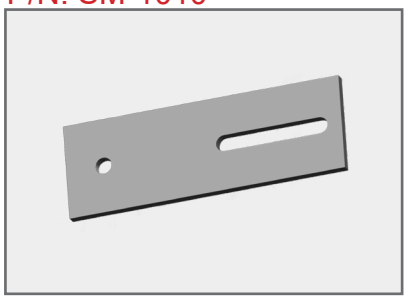

CODES	
AAR JOB	6541
GROUP	
QUALIFIER	
CONDITION	1
PART CODE	
X-REF	73618.11 M1050303WA

7/16”-Hole/Slot

Anti-Theft, Galvanized Steel
P/N: SM-1009

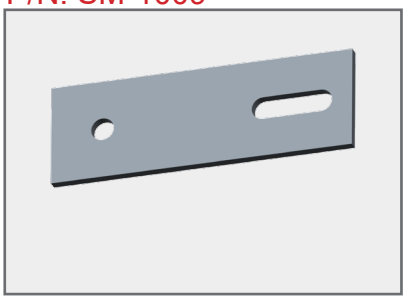

CODES	
AAR JOB	6541
GROUP	
QUALIFIER	
CONDITION	1
PART CODE	
X-REF	73618.1 M1050304

9/16”-Hole/Slot

Anti-Theft, Aluminum
P/N: SM-1007

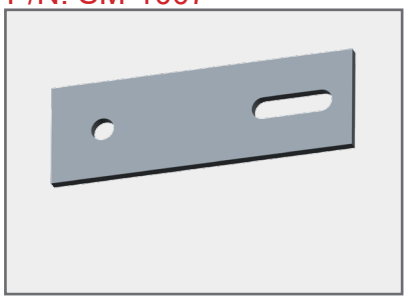

CODES	
AAR JOB	6541
GROUP	
QUALIFIER	
CONDITION	1
PART CODE	
X-REF	73618 M1050304WA

9/16”-Hole/Slot

Panel Retainer, Galvanized Steel
P/N: SM-1001

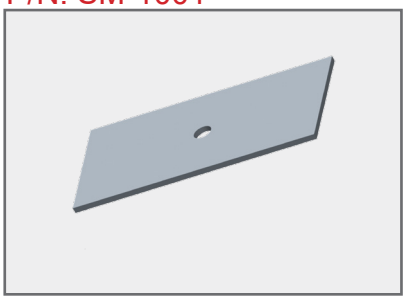

CODES	
AAR JOB	6542
GROUP	
QUALIFIER	
CONDITION	1
PART CODE	
X-REF	73168.52 M1050302

7/16”-Hole

Panel Retainer, Galvanized Steel
P/N: SM-1008

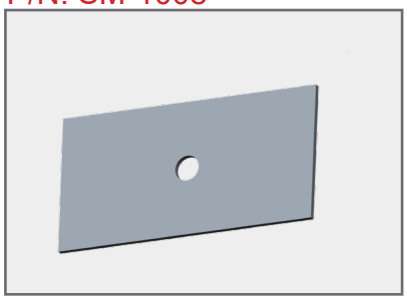

CODES	
AAR JOB	6542
GROUP	
QUALIFIER	
CONDITION	1
PART CODE	
X-REF	73618

9/16”-Hole

Side Screen Panel to Roof, Galvanized Steel
P/N: SM-1002

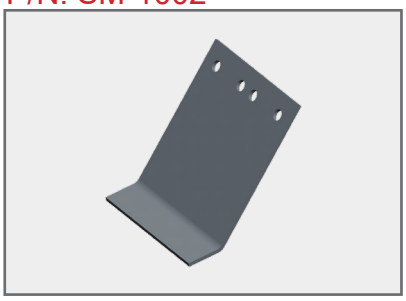

CODES	
AAR JOB	6540
GROUP	
QUALIFIER	
CONDITION	1
PART CODE	
X-REF	M1050375

Panel Retainer, 9/16”-Holes

Side Screen Panel to Roof Rail, Galvanized
P/N: SM-1003

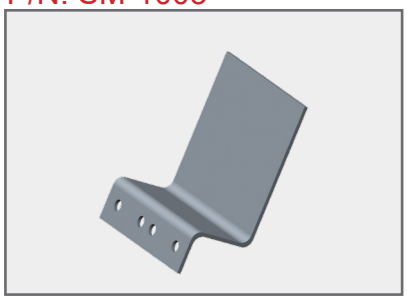

CODES	
AAR JOB	6540
GROUP	
QUALIFIER	
CONDITION	1
PART CODE	
X-REF	M1050376

Panel Retainer, 9/16”-Holes

BRIDGE PLATES ▶ PLATES

High Capacity Bridge Plate
P/N: WR56BP-P

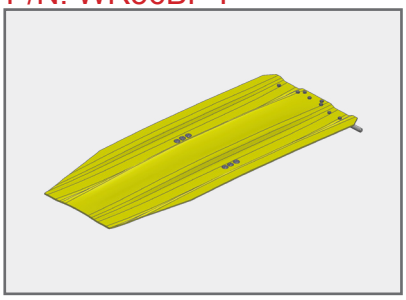

CODES	
AAR JOB	6040
GROUP	
QUALIFIER	
CONDITION	1
PART CODE	

X-REF
SS30025900 PN2730

56”

High Capacity Bridge Plate
P/N: WR53BP-P

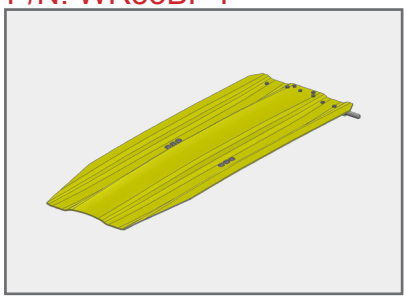

CODES	
AAR JOB	6040
GROUP	
QUALIFIER	
CONDITION	1
PART CODE	

X-REF
SS30025930 PN2734

53”

High Capacity Bridge Plate w/Stripes
P/N: WR56BP-PGS

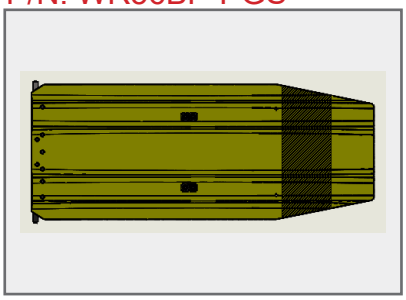

CODES	
AAR JOB	6040
GROUP	
QUALIFIER	
CONDITION	1
PART CODE	

X-REF

56”

High Capacity Bridge Plate w/Stripes
P/N: WR53BP-PGS

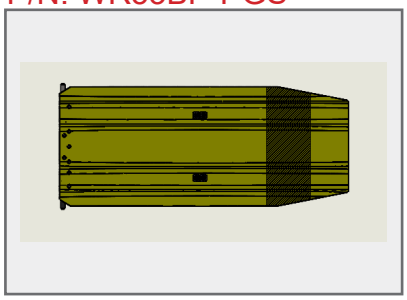

CODES	
AAR JOB	6040
GROUP	
QUALIFIER	
CONDITION	1
PART CODE	

X-REF

53”

Hinge w/ Fasteners
P/N: ZT-824

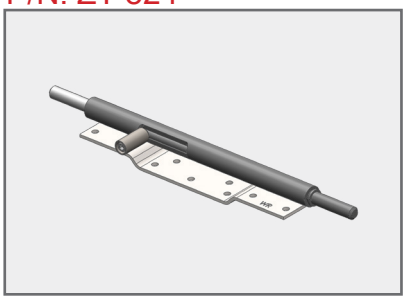

CODES	
AAR JOB	6042
GROUP	
QUALIFIER	3
CONDITION	1
PART CODE	

X-REF
40022510

Hinge Fasteners
P/N: ZT-824-KIT

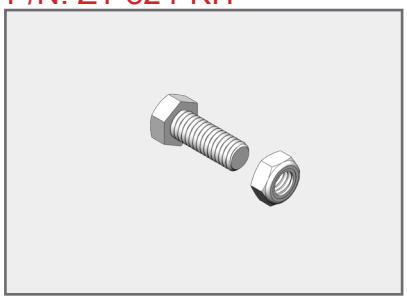

CODES	
AAR JOB	6042
GROUP	
QUALIFIER	
CONDITION	1
PART CODE	

X-REF

8-pcs. ea. Nut/ZT-830 & Bolt/ZT-458-1 per bag

Replaceable Spring/Active Pin
P/N: ZT-824-03

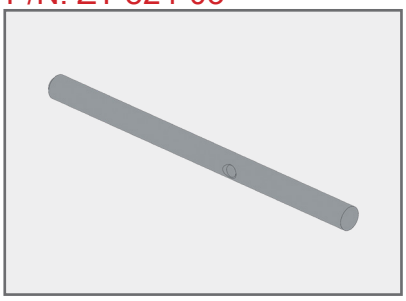

CODES	
AAR JOB	6499
GROUP	
QUALIFIER	
CONDITION	1
PART CODE	XZD

X-REF

Active Pin Handle
P/N: ZT-824-11-KIT

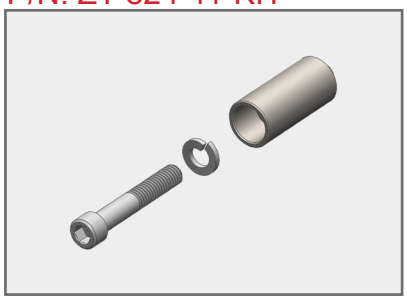

CODES	
AAR JOB	6499
GROUP	
QUALIFIER	
CONDITION	1
PART CODE	XZD

X-REF

BRIDGE PLATES ▶ PLATES

Spring
P/N: ZT-824-06

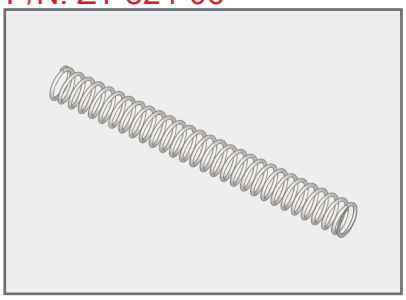

CODES	
AAR JOB	6499
GROUP	
QUALIFIER	
CONDITION	1
PART CODE	XZD
X-REF	

3/8”-16 X 1 HHCS
P/N: ZT-458-1

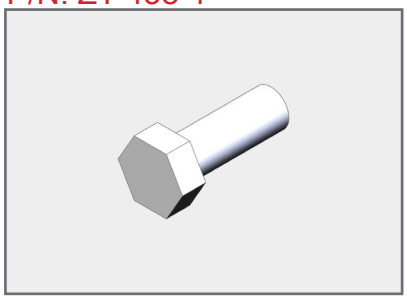

CODES	
AAR JOB	6499
GROUP	
QUALIFIER	
CONDITION	1
PART CODE	XZD
X-REF	CD101002

3/8”-16 Locknut
P/N: ZT-830

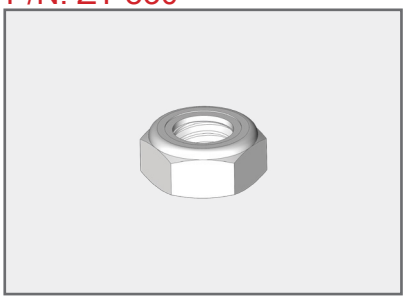

CODES	
AAR JOB	6499
GROUP	
QUALIFIER	
CONDITION	1
PART CODE	XZD
X-REF	

Anti-Skid Coating
P/N: ZT-547-1

CODES	
AAR JOB	6043
GROUP	
QUALIFIER	
CONDITION	1
PART CODE	
X-REF	

BRIDGE PLATES ▶ OFFSET

High Capacity Bridge Plate w/ Right Offset
P/N: WR56BP-P-R

CODES	
AAR JOB	6040
GROUP	
QUALIFIER	
CONDITION	1
PART CODE	

X-REF	

High Capacity Bridge Plate w/ Left Offset
P/N: WR56BP-P-L

CODES	
AAR JOB	6040
GROUP	
QUALIFIER	
CONDITION	1
PART CODE	

X-REF	

High Capacity Bridge Plate w/ Right Offset
P/N: WR53BP-P-R

CODES	
AAR JOB	6040
GROUP	
QUALIFIER	
CONDITION	1
PART CODE	

X-REF	

High Capacity Bridge Plate w/ Left Offset
P/N: WR53BP-P-L

CODES	
AAR JOB	6040
GROUP	
QUALIFIER	
CONDITION	1
PART CODE	

X-REF	

Hinge- Right Offset w/ Fasteners
P/N: ZT-824-R

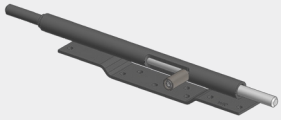

CODES	
AAR JOB	6042
GROUP	
QUALIFIER	
CONDITION	1
PART CODE	

X-REF	

Hinge- Left Offset w/ Fasteners
P/N: ZT-824-L

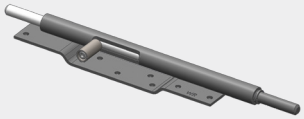

CODES	
AAR JOB	6042
GROUP	
QUALIFIER	
CONDITION	1
PART CODE	

X-REF	

BRIDGE PLATES ▶ SUPPORTS

Barrel Ring
P/N: ZT-679

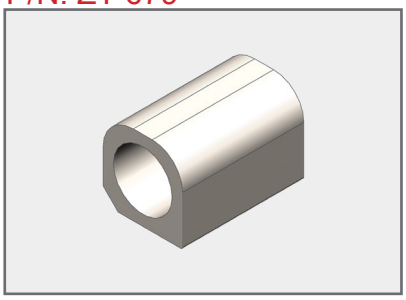

CODES	
AAR JOB	6600
GROUP	
QUALIFIER	
CONDITION	1
PART CODE	

X-REF
BH-1001 73116.2 M-197-80000 M-197-80000

Barrel Ring on 2” X 2” Baseplate
P/N: ZT-495

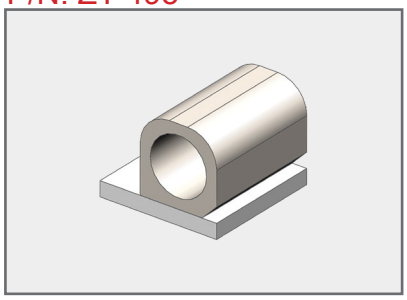

CODES	
AAR JOB	6600
GROUP	
QUALIFIER	
CONDITION	1
PART CODE	

X-REF
PA-1006 73116.89 M0290043 M0290043

Thrall Rack

Barrel Ring on 4” X 2” Baseplate
P/N: ZT-687

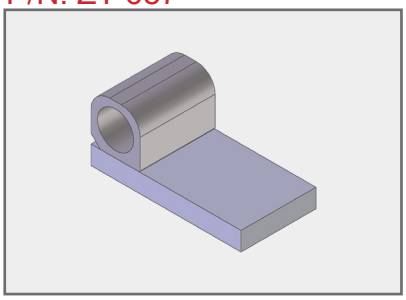

CODES	
AAR JOB	6600
GROUP	
QUALIFIER	
CONDITION	1
PART CODE	

X-REF
PA-1006M 73116.91 MM100677 MM100677

W&K Rack

Inner Bridge Plate Support
P/N: ZT-496

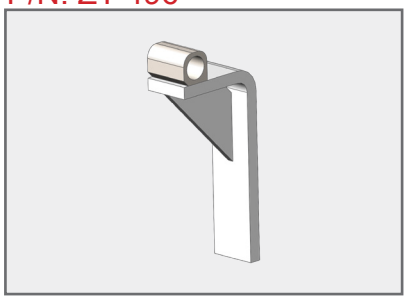

CODES	
AAR JOB	6600
GROUP	
QUALIFIER	
CONDITION	1
PART CODE	

X-REF
PA-1005M 73116.8

W&K Rack (With Gusset)

Inner Bridge Plate Support
P/N: ZT-497

CODES	
AAR JOB	6600
GROUP	
QUALIFIER	
CONDITION	1
PART CODE	

X-REF
PA-1005 73116.1 M0290019 M0290019

W&K Rack (Without Gusset)

Bridge Plate Support
P/N: ZT-838

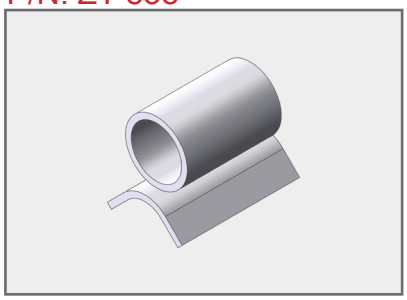

CODES	
AAR JOB	6600
GROUP	
QUALIFIER	
CONDITION	1
PART CODE	

X-REF
PA-11621 73116.21

Rave Door

Bridge Plate Support
P/N: ZT-838-01

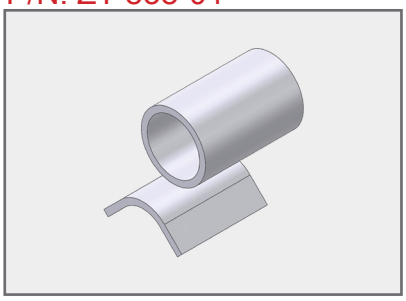

CODES	
AAR JOB	6600
GROUP	
QUALIFIER	
CONDITION	1
PART CODE	

X-REF
PA-11622 73116.22

Rave Door (Offset)

Bridge Plate Support
P/N: ZT-688-BR/AL

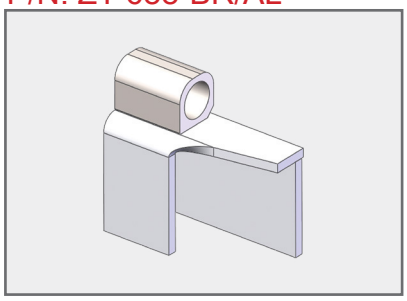

CODES	
AAR JOB	6600
GROUP	
QUALIFIER	
CONDITION	1
PART CODE	

X-REF
PA-1002 73116.4 M0290012 M0290012

Thrall / W&K Rack, A-Deck Outer

BRIDGE PLATES ▶ SUPPORTS

Bridge Plate Support
P/N: ZT-688-BL/AR

CODES	
AAR JOB	6600
GROUP	
QUALIFIER	
CONDITION	1
PART CODE	

X-REF
PA-1001 73116.3 M0290011 M0290011

Thrall / W&K Rack, A-Deck Outer

Bridge Plate Support - Improved, Kit
P/N: ZT-868-BL/AR-KIT

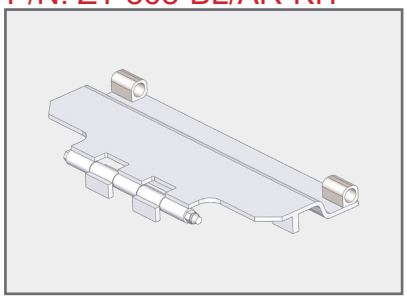

CODES	
AAR JOB	6603
GROUP	
QUALIFIER	
CONDITION	1
PART CODE	

X-REF

ABL Includes ZT-696, ZT-457-13 & ZT-441

Bridge Plate Support - Improved, Kit
P/N: ZT-868-BR/AL-KIT

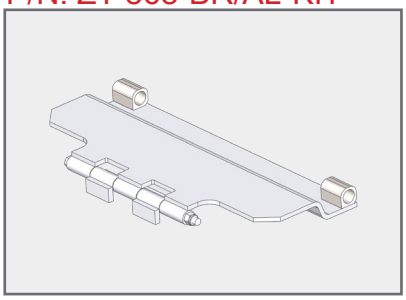

CODES	
AAR JOB	6603
GROUP	
QUALIFIER	
CONDITION	1
PART CODE	

X-REF

ABL Includes ZT-696, ZT-457-13 & ZT-441

Bridge Plate Support
P/N: ZT-868-BL/AR

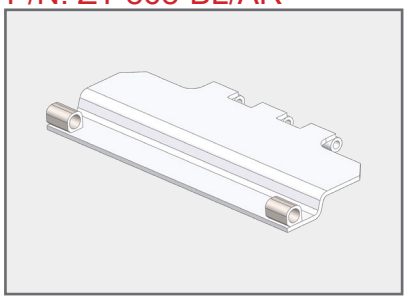

CODES	
AAR JOB	6603
GROUP	
QUALIFIER	
CONDITION	1
PART CODE	

X-REF

ABL, Improved

Bridge Plate Support
P/N: ZT-868-BR/AL

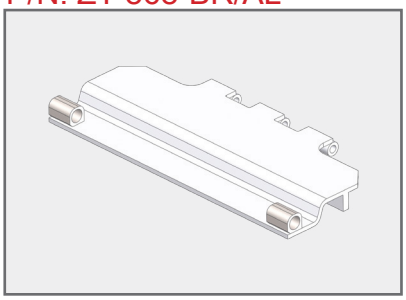

CODES	
AAR JOB	6603
GROUP	
QUALIFIER	
CONDITION	1
PART CODE	

X-REF

ABL, Improved

Bridge Plate Support
P/N: ZT-696

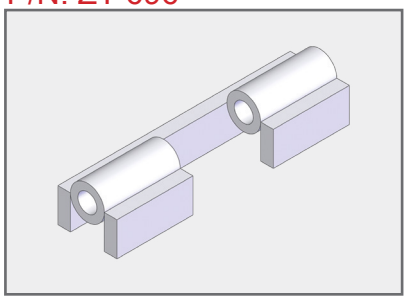

CODES	
AAR JOB	6499
GROUP	
QUALIFIER	
CONDITION	1
PART CODE	XDB

X-REF

ABL. Improved

Pivot Pin/Bolt - HHCS
P/N: ZT-457-13

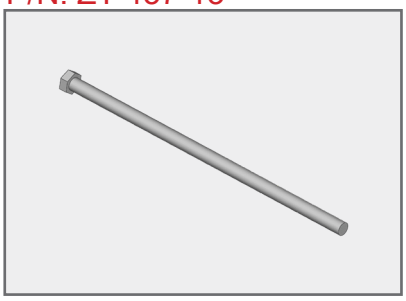

CODES	
AAR JOB	6499
GROUP	
QUALIFIER	
CONDITION	1
PART CODE	XDB

X-REF

ABL, 1/2”-13 x 13

Pivot Pin Nylon Insert Lock Nut
P/N: ZT-441

CODES	
AAR JOB	6499
GROUP	
QUALIFIER	
CONDITION	1
PART CODE	XDB

X-REF

ABL, 1/2”-13 (25-pcs. per pkg.)

BRIDGE PLATES ▶ SUPPORTS

Bridge Plate Deck Support
P/N: ZT-865

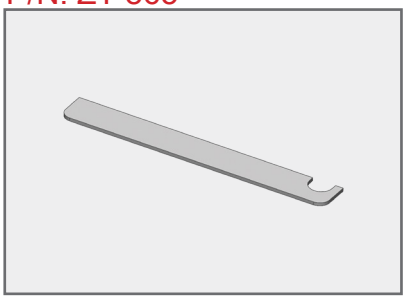

CODES	
AAR JOB	6499
GROUP	
QUALIFIER	
CONDITION	1
PART CODE	XOG
X-REF	

Low Level Raised Sill Flat

Bridge Plate Deck Support Pad
P/N: ZT-865-01

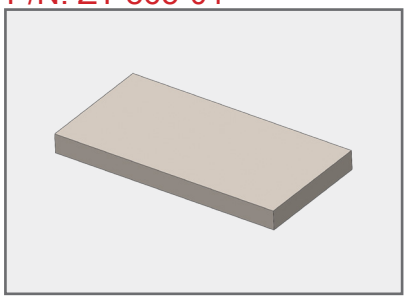

CODES	
AAR JOB	6499
GROUP	
QUALIFIER	
CONDITION	1
PART CODE	XOG
X-REF	

Bridge Plate Support
P/N: ZT-878-BL/AR

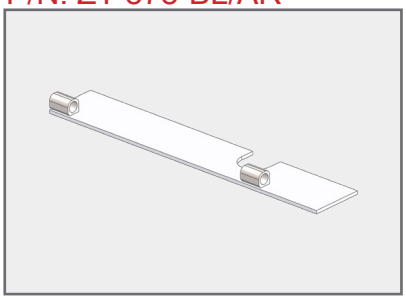

CODES	
AAR JOB	6600
GROUP	
QUALIFIER	
CONDITION	1
PART CODE	
X-REF	

Thrall/ W&K Rack, B-Deck of Bi, C-Deck of Tri

Bridge Plate Support
P/N: ZT-878-BR/AL

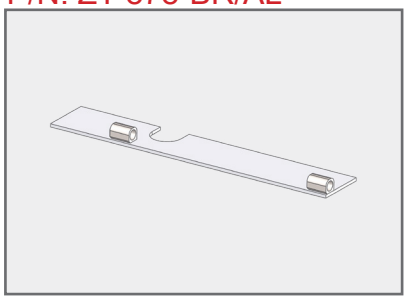

CODES	
AAR JOB	6600
GROUP	
QUALIFIER	
CONDITION	1
PART CODE	
X-REF	

Thrall/ W&K Rack, B-Deck of Bi, C-Deck of Tri

Bridge Plate Support
P/N: ZT-875-BL/AR

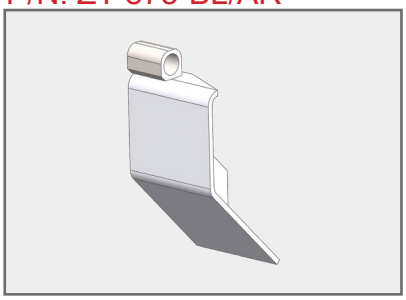

CODES	
AAR JOB	6600
GROUP	
QUALIFIER	
CONDITION	1
PART CODE	
X-REF	PA-1003 73616 M0290017 M0290017

Thrall/ W&K Rack, Tri-Level, A-Deck Outer

Bridge Plate Support
P/N: ZT-875-BR/AL

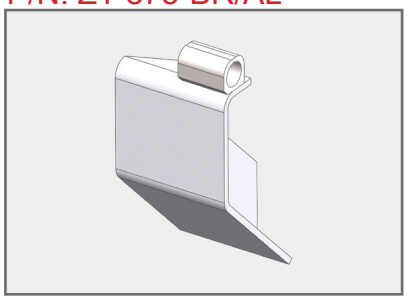

CODES	
AAR JOB	6600
GROUP	
QUALIFIER	
CONDITION	1
PART CODE	
X-REF	PA-1004 73617 M0290018 M0290018

Thrall/ W&K Rack, Tri-Level, A-Deck Outer

Bridge Plate Support
P/N: ZT-876-BL/AR

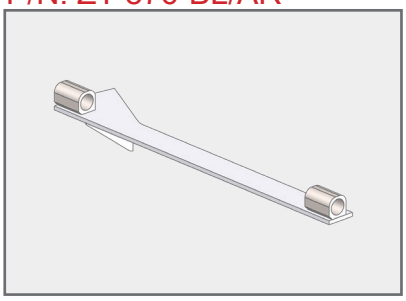

CODES	
AAR JOB	6600
GROUP	
QUALIFIER	
CONDITION	1
PART CODE	
X-REF	

Automax

Bridge Plate Support
P/N: ZT-876-BR/AL

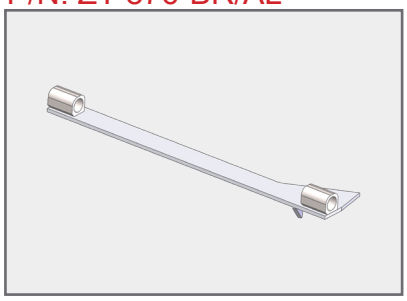

CODES	
AAR JOB	6600
GROUP	
QUALIFIER	
CONDITION	1
PART CODE	
X-REF	

Automax

BRIDGE PLATES ▶ SUPPORTS

Bridge Plate Support
P/N: ZT-877

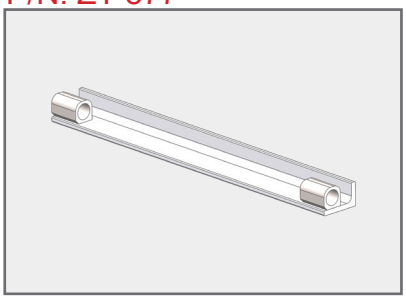

CODES	
AAR JOB	6600
GROUP	
QUALIFIER	
CONDITION	1
PART CODE	

X-REF	
	73149

Bridge Plate Support
P/N: ZT-879

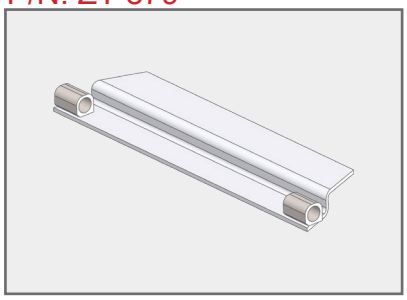

CODES	
AAR JOB	6600
GROUP	
QUALIFIER	
CONDITION	1
PART CODE	

X-REF	
	73116

Barrel Ring Fixture
P/N: ZT-1015

CODES	
AAR JOB	
GROUP	
QUALIFIER	
CONDITION	
PART CODE	

X-REF	

DOOR PARTS ► CABLE ASSEMBLY

Door Lock Cable Assy.
P/N: ZT-828-01

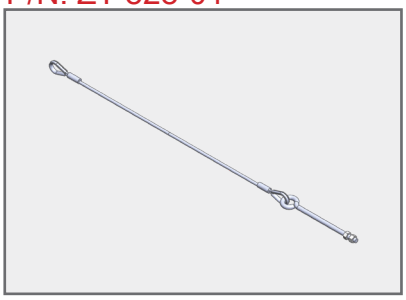

CODES	
AAR JOB	6111
GROUP	
QUALIFIER	
CONDITION	1
PART CODE	

X-REF
73231.1 D0100006 PN2777.6.8 PN2777.6.8

Bi-Level, 6’-8”

Door Lock Cable Assy.
P/N: ZT-828-02

CODES	
AAR JOB	6111
GROUP	
QUALIFIER	
CONDITION	1
PART CODE	

X-REF
73231.42 D0100023A DC112043 DC112043

Bi-Level, 7’-0”

Door Lock Cable Assy.
P/N: ZT-828-03

CODES	
AAR JOB	6111
GROUP	
QUALIFIER	
CONDITION	1
PART CODE	

X-REF
73231.2 PN2777.7.6

Bi-Level, 7’-6”

Door Lock Cable Assy.
P/N: ZT-828-04

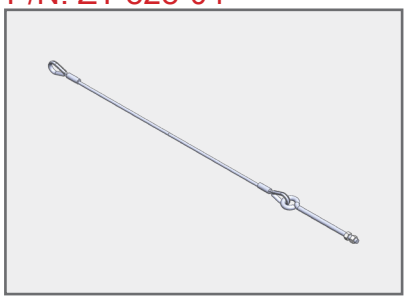

CODES	
AAR JOB	6111
GROUP	
QUALIFIER	
CONDITION	1
PART CODE	

X-REF
73231.3 D0100007 PN2777.9.7 PN2777.9.7

Tri-Level, 9’-7”

Door Lock Cable Assy.
P/N: ZT-828-05

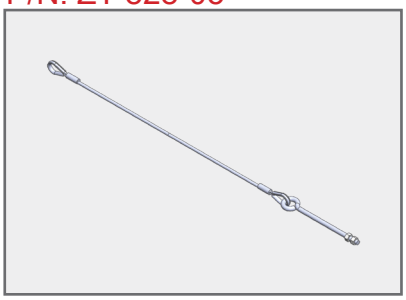

CODES	
AAR JOB	6111
GROUP	
QUALIFIER	
CONDITION	1
PART CODE	

X-REF
73231.4 D01100014 PN2777.10.4 PN2777.10.4

20’-2” Tri-Level, 10’-4”

Door Lock Cable Assy.
P/N: ZT-828-06

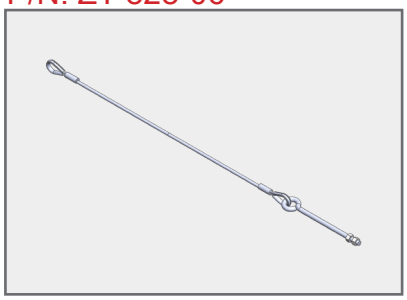

CODES	
AAR JOB	6111
GROUP	
QUALIFIER	
CONDITION	1
PART CODE	

X-REF
73231.41 PN2777.10.7

General, 10’-7”

Safety Cable
P/N: ZT-870-31

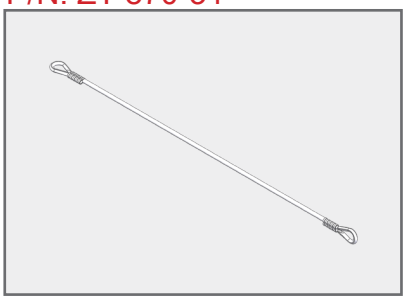

CODES	
AAR JOB	6140
GROUP	
QUALIFIER	
CONDITION	1
PART CODE	

X-REF
73232.3 D0110008

2’-7”

Safety Cable
P/N: ZT-870-28

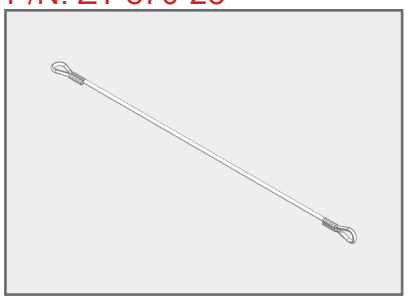

CODES	
AAR JOB	6140
GROUP	
QUALIFIER	
CONDITION	1
PART CODE	

X-REF
73232 D0110001

2’-4”

DOOR PARTS ► CABLE ASSEMBLY

Safety Cable
P/N: ZT-870-26

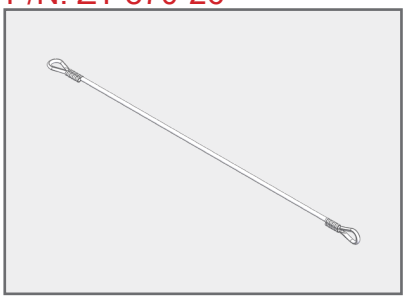

CODES	
AAR JOB	6140
GROUP	
QUALIFIER	
CONDITION	1
PART CODE	

X-REF
73232.1 DC112042

2’-2”

Safety Cable
P/N: ZT-870-23

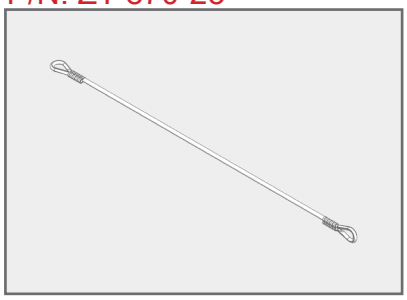

CODES	
AAR JOB	6140
GROUP	
QUALIFIER	
CONDITION	1
PART CODE	

X-REF
73232.2 DC112041

1’-11”

Shackle, Anchor 5/16”
P/N: ZT-902

CODES	
AAR JOB	6499
GROUP	
QUALIFIER	
CONDITION	1
PART CODE	XOJ

X-REF

5/16” Shackle x 3/8” Bolt Dia.

Shackle, Anchor 3/8”
P/N: ZT-902-38

CODES	
AAR JOB	6499
GROUP	
QUALIFIER	
CONDITION	1
PART CODE	XOJ

X-REF
73238 CM101002

3/8” Shackle x 7/16” Bolt Dia.

Bolt, Eye, Zn Plated
P/N: EB-3303

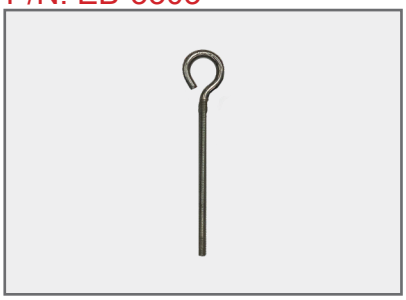

CODES	
AAR JOB	6499
GROUP	
QUALIFIER	
CONDITION	1
PART CODE	XOJ

X-REF
73303 ZZ000058

3/8” x 8” (Under Head) w/ Nuts & Washers

DOOR PARTS ► GUIDES & COMPONENTS

Finger Guide w/ Slotted Holes
P/N: ZT-108

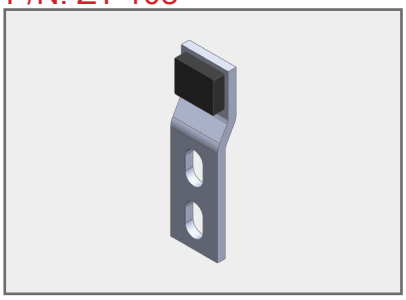

CODES	
AAR JOB	6135
GROUP	
QUALIFIER	
CONDITION	1
PART CODE	

X-REF
PN2276 73721 DM001003 DM001003

Top Door Guide Conversion Kit
P/N: ZT-131

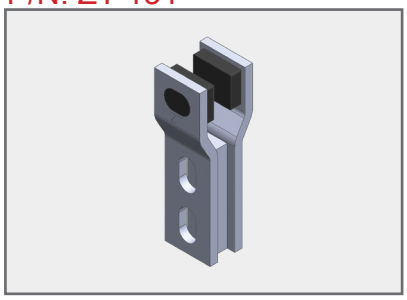

CODES	
AAR JOB	6135
GROUP	
QUALIFIER	
CONDITION	1
PART CODE	

X-REF

Bracket, Top Plate (Narrow Door)
P/N: DA-1024-01

CODES	
AAR JOB	6499
GROUP	
QUALIFIER	
CONDITION	1
PART CODE	XOL

X-REF
73217.9 D1180018

10-1/2” (BL/AR)

Bracket, Top Plate
P/N: DA-1024A

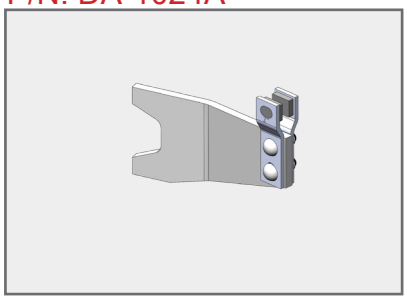

CODES	
AAR JOB	6499
GROUP	
QUALIFIER	
CONDITION	1
PART CODE	XOL

X-REF
73217.97 D0130025

10-1/2” (BL/AR)

Bracket, Top Plate (Narrow Door)
P/N: DA-1025-01

CODES	
AAR JOB	6499
GROUP	
QUALIFIER	
CONDITION	1
PART CODE	XOL

X-REF
73217.91 D1180019

10-1/2” (BR/AL)

Bracket, Top Plate
P/N: DA-1025A

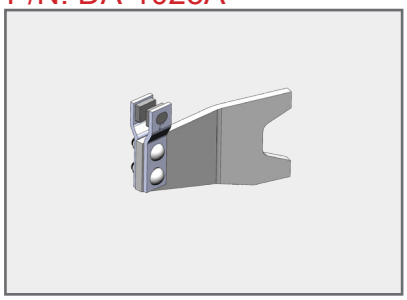

CODES	
AAR JOB	6499
GROUP	
QUALIFIER	
CONDITION	1
PART CODE	XOL

X-REF
73217.98 D0130026

10-1/2” (BR/AL)

Bracket, Top Plate (Narrow Door)
P/N: DA-1031-01

CODES	
AAR JOB	6499
GROUP	
QUALIFIER	
CONDITION	1
PART CODE	XOL

X-REF
73217.71 D1180008

9-1/4” (BL/AR)

Bracket, Top Plate
P/N: DA-1031A

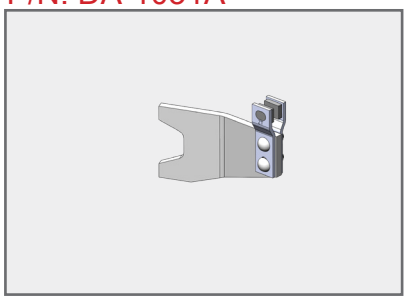

CODES	
AAR JOB	6499
GROUP	
QUALIFIER	
CONDITION	1
PART CODE	XOL

X-REF
73217.92 D0130021

9-1/4” (BL/AR)

DOOR PARTS ► GUIDES & COMPONENTS

Bracket, Top Plate (Narrow Door)

P/N: DA-1030-01

CODES	
AAR JOB	6499
GROUP	
QUALIFIER	
CONDITION	1
PART CODE	XOL

X-REF
73217.72 D1180009

9-1/4” (BR/AL)

Bracket, Top Plate

P/N: DA-1030A

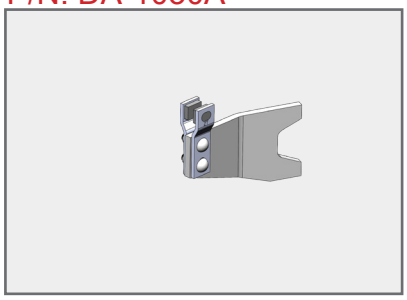

CODES	
AAR JOB	6499
GROUP	
QUALIFIER	
CONDITION	1
PART CODE	XOL

X-REF
73217.93 D0130022

9-1/4” (BR/AL)

DOOR PARTS ► LOCKS, HASPS & COMPONENTS

Bottom Door Lock Assy.
P/N: ZT-803-BL/AR

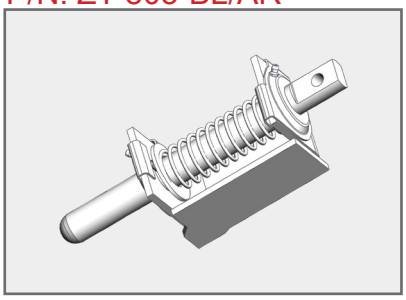

CODES	
AAR JOB	6120
GROUP	
QUALIFIER	
CONDITION	1
PART CODE	

X-REF
DA-1019 73215.11 D-076-2008 D-076-2008

Bottom Door Lock Assy.
P/N: ZT-803-BR/AL

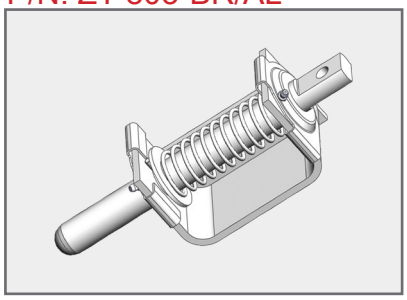

CODES	
AAR JOB	6120
GROUP	
QUALIFIER	
CONDITION	1
PART CODE	

X-REF
DA-1020 73215.1 D-076-2009 D-076-2009

Bracket, Bottom Radial Door Lock
P/N: ZT-792-BL/AR

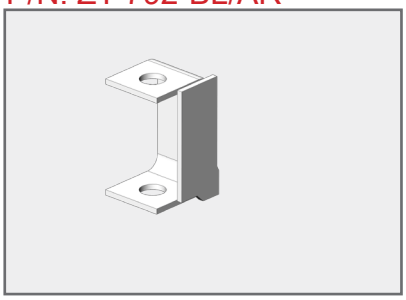

CODES	
AAR JOB	6121
GROUP	
QUALIFIER	
CONDITION	1
PART CODE	

X-REF
DA-1019-03

Bracket, Bottom Radial Door Lock
P/N: ZT-792-BR/AL

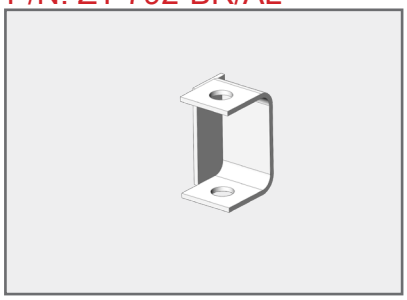

CODES	
AAR JOB	6121
GROUP	
QUALIFIER	
CONDITION	1
PART CODE	

X-REF
DA-1020-03

Top Door Lock Assy.
P/N: ZT-804-BL/AR

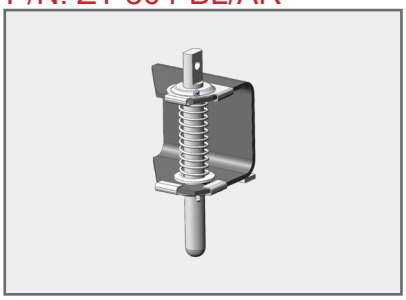

CODES	
AAR JOB	6120
GROUP	
QUALIFIER	
CONDITION	1
PART CODE	

X-REF
DA-1016 73210 D-076-2007 D-076-2007

Top Door Lock Assy.
P/N: ZT-804-BR/AL

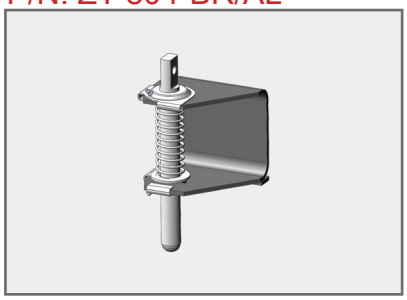

CODES	
AAR JOB	6120
GROUP	
QUALIFIER	
CONDITION	1
PART CODE	

X-REF
DA-1015 73210.5 D-076-2006 D-076-2006

Bracket, Top Radial Door Lock
P/N: ZT-793-BL/AR

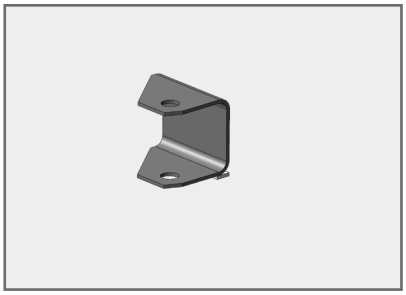

CODES	
AAR JOB	6121
GROUP	
QUALIFIER	
CONDITION	1
PART CODE	

X-REF
DA-1016-03 73211.1 M0940002 M0940002

Bracket, Top Radial Door Lock
P/N: ZT-793-BR/AL

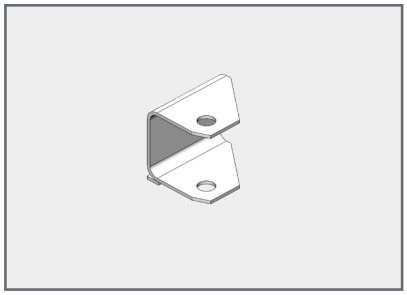

CODES	
AAR JOB	6121
GROUP	
QUALIFIER	
CONDITION	1
PART CODE	

X-REF
DA-1015-03 73211.11 M0940001 M0940001

DOOR PARTS ► LOCKS, HASPS & COMPONENTS

Bottom Door Lock Assy. 'No-Lube'
P/N: ZT-303-BL/AR

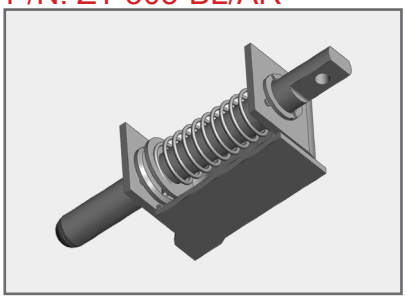

CODES	
AAR JOB	6120
GROUP	
QUALIFIER	
CONDITION	1
PART CODE	
X-REF	

Bottom Door Lock Assy. 'No-Lube'
P/N: ZT-303-BR/AL

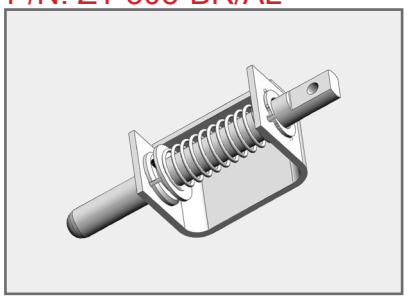

CODES	
AAR JOB	6120
GROUP	
QUALIFIER	
CONDITION	1
PART CODE	
X-REF	

Top Door Lock Assy. 'No-Lube'
P/N: ZT-304-BL/AR

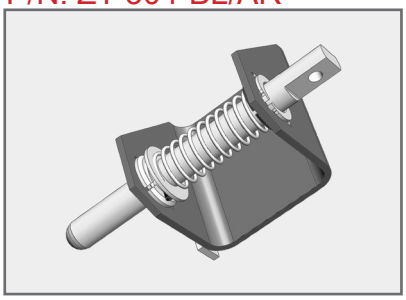

CODES	
AAR JOB	6120
GROUP	
QUALIFIER	
CONDITION	1
PART CODE	
X-REF	

Top Door Lock Assy. 'No-Lube'
P/N: ZT-304-BR/AL

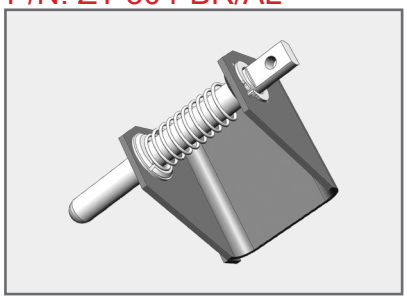

CODES	
AAR JOB	6120
GROUP	
QUALIFIER	
CONDITION	1
PART CODE	
X-REF	

Lock Pin Washer
P/N: ZT-474

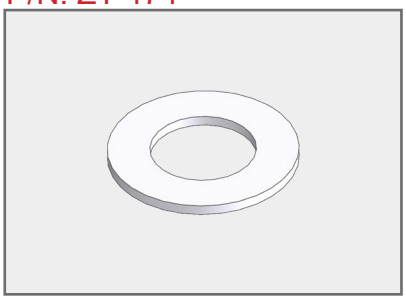

CODES	
AAR JOB	6499
GROUP	
QUALIFIER	
CONDITION	1
PART CODE	XOE
X-REF	53107 063-38169

Radial and SealSafe Door Locks

Lock Pin Springs
P/N: ZT-916

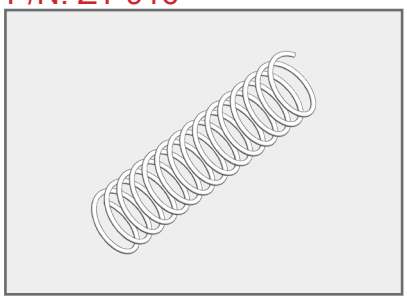

CODES	
AAR JOB	6124
GROUP	
QUALIFIER	
CONDITION	1
PART CODE	
X-REF	DM-1021 73163 M-289-80002 M-289-80002

Radial and SealSafe Door Locks

Lock Pin
P/N: ZT-471

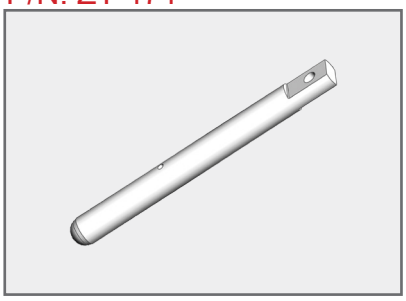

CODES	
AAR JOB	6125
GROUP	
QUALIFIER	
CONDITION	1
PART CODE	
X-REF	DP-1001 73213 M-355-80009 M-355-80009

1-1/8" x 11-3/4" lg.

Lock Grease Cup
P/N: ZT-794

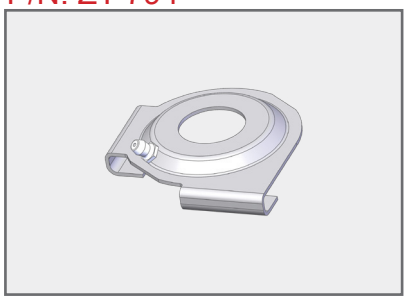

CODES	
AAR JOB	6499
GROUP	
QUALIFIER	
CONDITION	1
PART CODE	XOE
X-REF	10279-009 73214 D-999-7195 D-999-7195

Radial Door Locks

DOOR PARTS ► LOCKS, HASPS & COMPONENTS

Lock Pin Assy., Upper
P/N: DA-1006-BL/AR

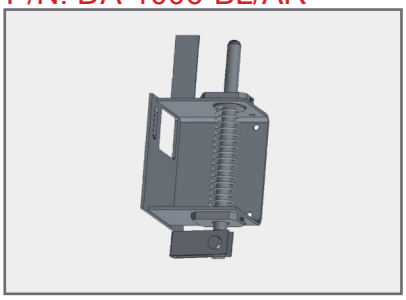

CODES	
AAR JOB	6220
GROUP	
QUALIFIER	
CONDITION	1
PART CODE	

X-REF
73211.52 D0390021

ABL Door (BL/AR) Complete Assy.

Lock Pin Assy. Housing, Upper
P/N: DA-1006-01-BL/AR

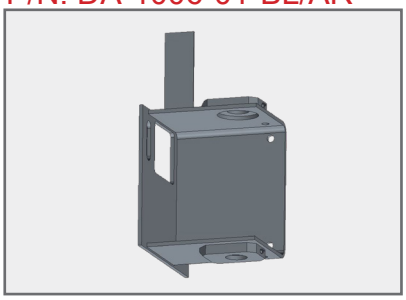

CODES	
AAR JOB	6221
GROUP	
QUALIFIER	
CONDITION	1
PART CODE	

X-REF

ABL Door (BL/AR) (Top Lock)

Bar, Attachment (Door Lock Cable)
P/N: DA-1006-06

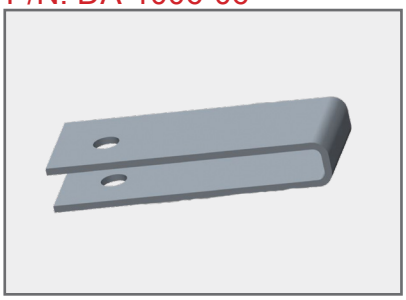

CODES	
AAR JOB	6499
GROUP	
QUALIFIER	
CONDITION	1
PART CODE	XOJ

X-REF

ABL Door (Top Lock)

Lock Hasp Staple
P/N: ZT-952

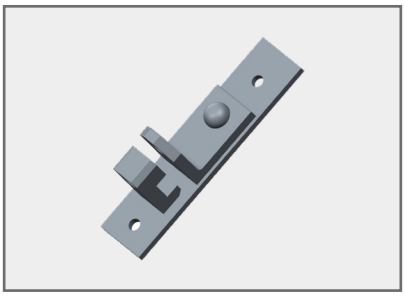

CODES	
AAR JOB	6242
GROUP	
QUALIFIER	
CONDITION	1
PART CODE	

X-REF
73536.2 D-099-2025

On BL/AR SealSafe Door

Lock Pin Assy., Upper
P/N: DA-1006-BR/AL

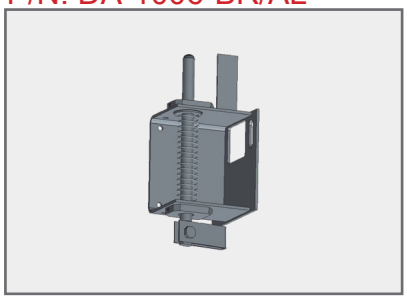

CODES	
AAR JOB	6220
GROUP	
QUALIFIER	
CONDITION	1
PART CODE	

X-REF
73211.53 D0390022

ABL Door (BR/AL) Complete Assy.

Lock Pin Assy. Housing, Upper
P/N: DA-1006-01-BR/AL

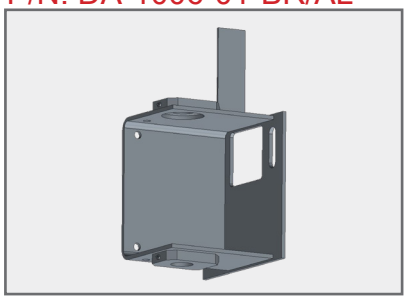

CODES	
AAR JOB	6221
GROUP	
QUALIFIER	
CONDITION	1
PART CODE	

X-REF

ABL Door (BR/AL) (Top Lock)

Pin, Upper Door Lock
P/N: DP-1005

CODES	
AAR JOB	6225
GROUP	
QUALIFIER	
CONDITION	1
PART CODE	

X-REF
73211.51 DD100029

ABL, 1-1/8” x 18.75” lg. (Top Lock)

DOOR PARTS ► LOCKS, HASPS & COMPONENTS

Hasp Lock
P/N: ZT-953

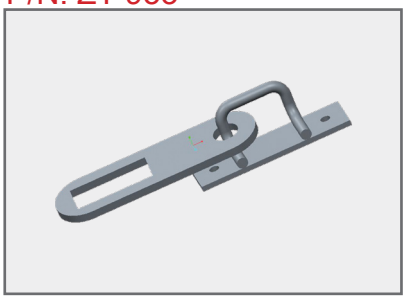

CODES	
AAR JOB	6243
GROUP	
QUALIFIER	
CONDITION	1
PART CODE	

X-REF
73536.21 D-099-2024

On BR/AL SealSafe Door

Interlock, Roof Rod
P/N: DA-1021

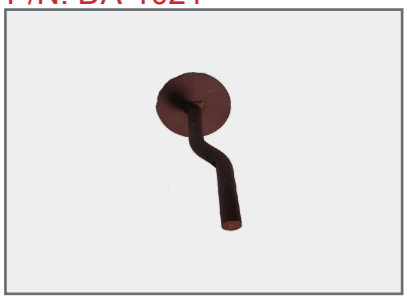

CODES	
AAR JOB	6511
GROUP	
QUALIFIER	
CONDITION	1
PART CODE	

X-REF
73213.28 M0860001

Lower Lock Arm
P/N: ZT-871

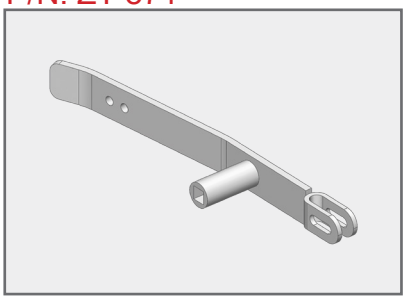

CODES	
AAR JOB	6499
GROUP	
QUALIFIER	
CONDITION	1
PART CODE	XOD

X-REF
DA-1003 73216.1 D0090002 D0090002

Upper Lock Pin Receiver
P/N: ZT-874

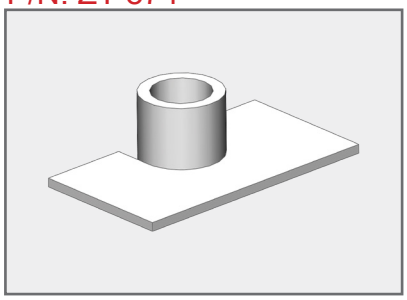

CODES	
AAR JOB	6499
GROUP	
QUALIFIER	
CONDITION	1
PART CODE	XOK

X-REF
DA-1014 73213.27 D-037-2005 D-037-2005

Center

Top Lock Retainer Pipe
P/N: DA-1014-2

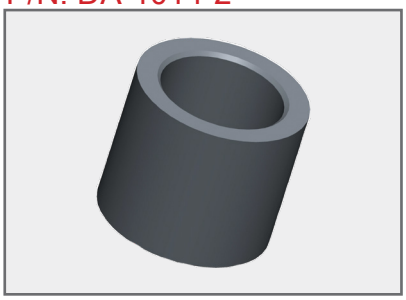

CODES	
AAR JOB	6650
GROUP	
QUALIFIER	
CONDITION	1
PART CODE	

X-REF
73213.1 10279-002

Upper Lock Pin Receiver
P/N: ZT-869

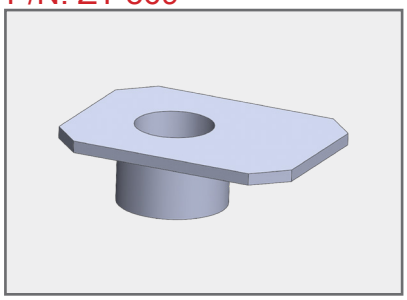

CODES	
AAR JOB	6499
GROUP	
QUALIFIER	
CONDITION	1
PART CODE	XOK

X-REF
DA-1012 73213.2 D-037-2006 D-037-2006

At #1 Post

1/4” Quick Link Coupling
P/N: ZT-737

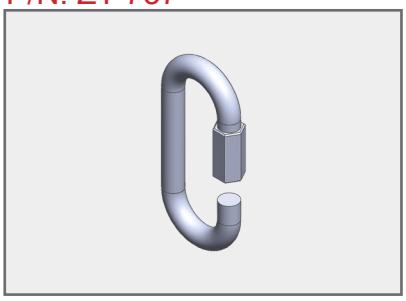

CODES	
AAR JOB	6499
GROUP	
QUALIFIER	
CONDITION	1
PART CODE	XOJ

X-REF

Lock Hasp
P/N: ZT-807

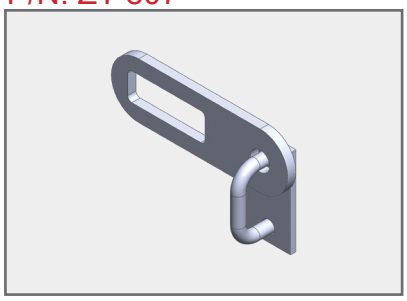

CODES	
AAR JOB	6143
GROUP	
QUALIFIER	
CONDITION	1
PART CODE	

X-REF
DA-1017 73313 M0300024 M0300024

On BR/AL Radial Door

DOOR PARTS ► LOCKS, HASPS & COMPONENTS

Lock Hasp Staple
P/N: ZT-805

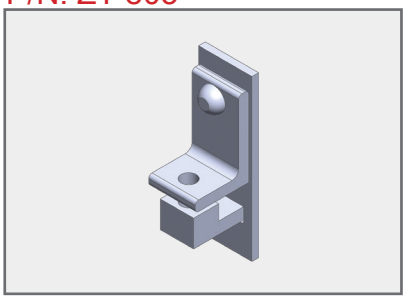

CODES	
AAR JOB	6142
GROUP	
QUALIFIER	
CONDITION	1
PART CODE	

X-REF
DA-1018 73317 M0300031 M0300031

On BL/AR Radial Door

Lock Roll Pin
P/N: ZT-475-01

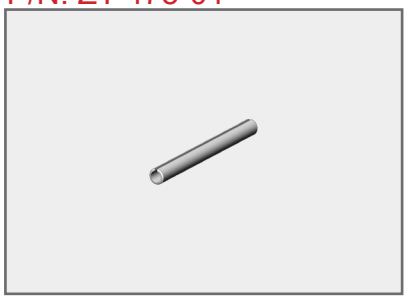

CODES	
AAR JOB	6400
GROUP	
QUALIFIER	
CONDITION	1
PART CODE	XOE

X-REF
55357 CM106003

3/16” x 2”

Lock Roll Pin
P/N: ZT-475

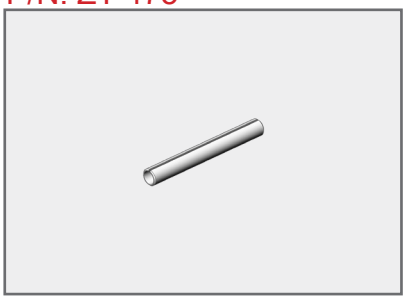

CODES	
AAR JOB	6400
GROUP	
QUALIFIER	
CONDITION	1
PART CODE	XOE

X-REF
73241 063-38174

1/4” x 2”

Lock Pin
P/N: DP-1004

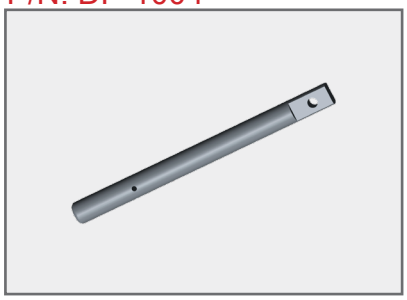

CODES	
AAR JOB	6125
GROUP	
QUALIFIER	
CONDITION	1
PART CODE	

X-REF
73213.3

U. P. Bi-Levels/ ABL 1-1/8” x 14” lg.

Upper Lock Arm
P/N: ZT-806

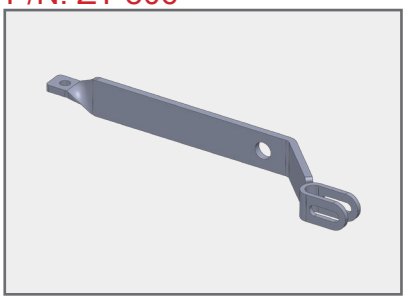

CODES	
AAR JOB	6499
GROUP	
QUALIFIER	
CONDITION	1
PART CODE	XOD

X-REF
DA-1002 73260 D0090001 D0090001

Lock Lever Nut Assy.
P/N: ZT-872

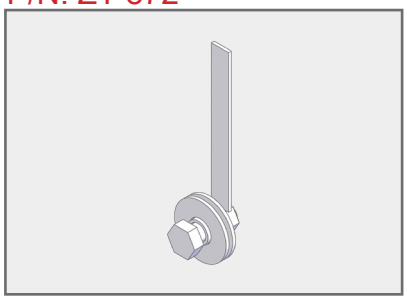

CODES	
AAR JOB	6499
GROUP	
QUALIFIER	
CONDITION	1
PART CODE	XOE

X-REF
DA-1001 73836 D-058-2003 D-058-2003

Upper Lock Arm & Lock Lever Nut Assy.
P/N: ZT-806-KIT

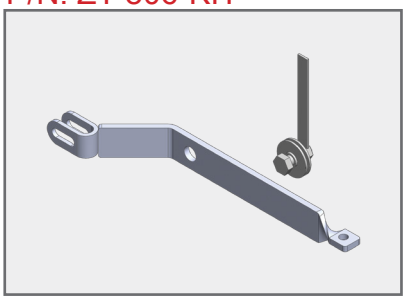

CODES	
AAR JOB	6499
GROUP	
QUALIFIER	
CONDITION	1
PART CODE	XOD

X-REF

Zerk Fitting 1/4” Drive Type
P/N: ZT-795-01

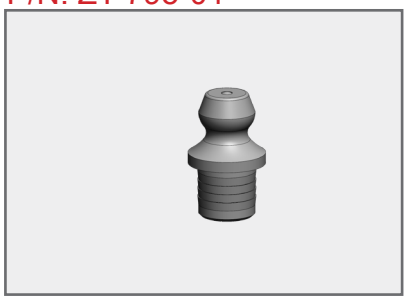

CODES	
AAR JOB	6499
GROUP	
QUALIFIER	
CONDITION	1
PART CODE	

X-REF
69955.4

DOOR PARTS ► LOCKS, HASPS & COMPONENTS

Lock 'No-Lube' Bushing
P/N: ZT-470

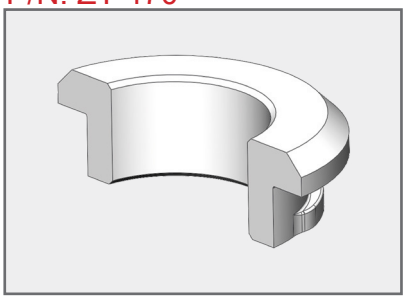

CODES	
AAR JOB	6499
GROUP	
QUALIFIER	
CONDITION	1
PART CODE	XOE
X-REF	

Lock Pin
P/N: ZT-995

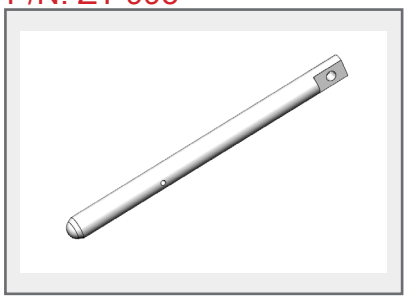

CODES	
AAR JOB	6125
GROUP	
QUALIFIER	
CONDITION	
PART CODE	
X-REF	M-355-80049

1-1/8" x 14-7/32" lg. Trinity 20'-2" Autorack

Lock Pin
P/N: M-355-80008

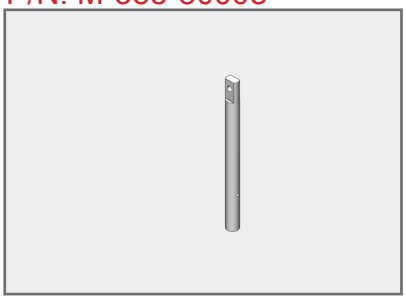

CODES	
AAR JOB	6125
GROUP	
QUALIFIER	
CONDITION	
PART CODE	
X-REF	

1-1/8" x 14" lg.

Door Lock Support
P/N: M-217-80047

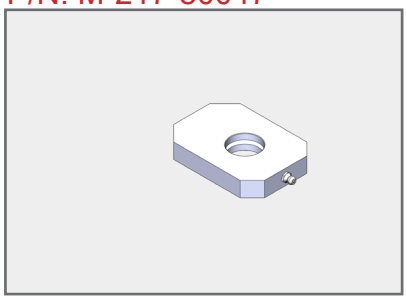

CODES	
AAR JOB	6125
GROUP	
QUALIFIER	
CONDITION	
PART CODE	
X-REF	

Door Lock Pivot Tool
P/N: D-342-80000

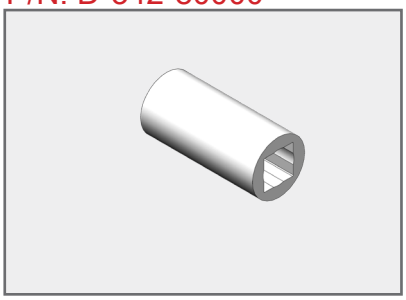

CODES	
AAR JOB	6125
GROUP	
QUALIFIER	
CONDITION	
PART CODE	
X-REF	

1-3/8" Dia. X 2-15/16"

Pin
P/N: M-355-80050

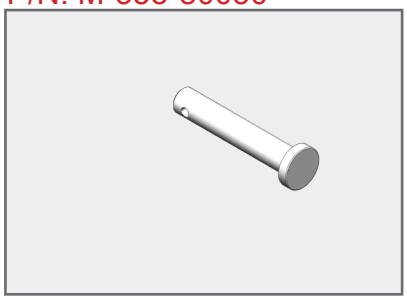

CODES	
AAR JOB	6125
GROUP	
QUALIFIER	
CONDITION	
PART CODE	
X-REF	

1-5/8" Dia. X 5-7/8"

DOOR PARTS ► PIVOT BOLT ASSYS./ STABILIZERS

Pivot Bolt Kit
P/N: PC-1001

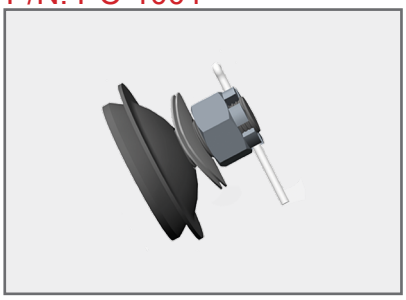

CODES	
AAR JOB	6205
GROUP	
QUALIFIER	
CONDITION	1
PART CODE	
X-REF	DM100192

SealSafe Door

Stabilizer/Pivot Bolt Kit
P/N: ZT-619-BL/AR

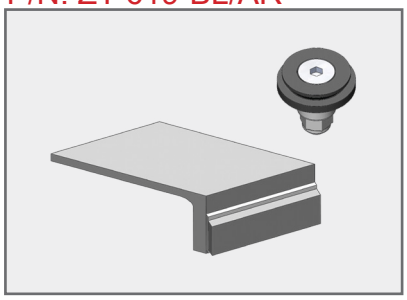

CODES	
AAR JOB	6499
GROUP	
QUALIFIER	
CONDITION	1
PART CODE	XOT
X-REF	

Radial Door, Bi-Level

Stabilizer/Pivot Bolt Kit
P/N: ZT-619-BR/AL

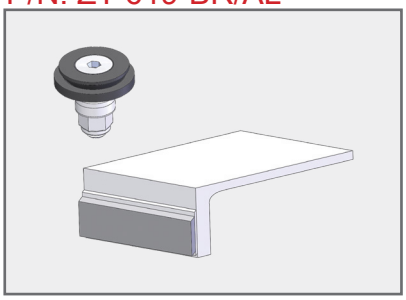

CODES	
AAR JOB	6499
GROUP	
QUALIFIER	
CONDITION	1
PART CODE	XOT
X-REF	

Radial Door, Bi-Level

Stabilizer/Pivot Bolt Kit
P/N: ZT-620-BL/AR

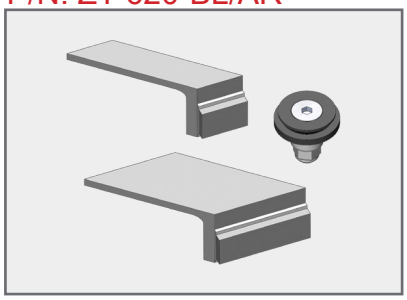

CODES	
AAR JOB	6499
GROUP	
QUALIFIER	
CONDITION	1
PART CODE	XOT
X-REF	

Radial Door, Tri-Level

Stabilizer/Pivot Bolt Kit
P/N: ZT-620-BR/AL

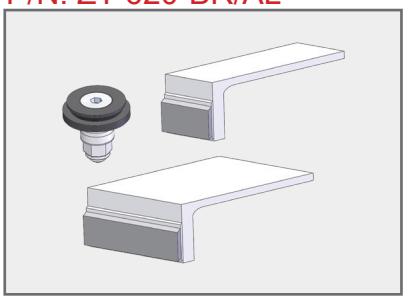

CODES	
AAR JOB	6499
GROUP	
QUALIFIER	
CONDITION	1
PART CODE	XOT
X-REF	

Radial Door, Tri-Level

3” Door Stabilizer
P/N: ZT-516-BL/AR

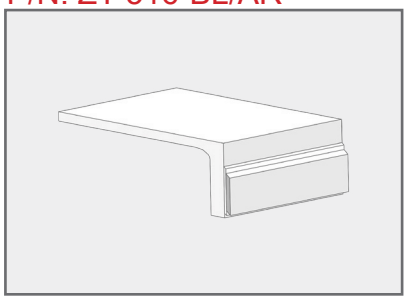

CODES	
AAR JOB	6499
GROUP	
QUALIFIER	
CONDITION	1
PART CODE	XOT
X-REF	

3” Door Stabilizer
P/N: ZT-516-BR/AL

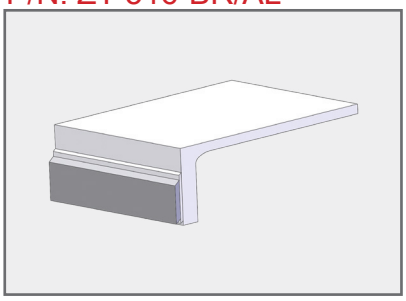

CODES	
AAR JOB	6499
GROUP	
QUALIFIER	
CONDITION	1
PART CODE	XOT
X-REF	

1-1/2” Door Stabilizer
P/N: ZT-517-BL/AR

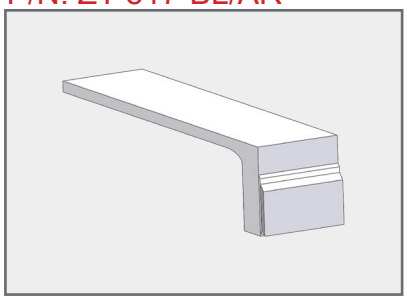

CODES	
AAR JOB	6499
GROUP	
QUALIFIER	
CONDITION	1
PART CODE	XOT
X-REF	

DOOR PARTS ► PIVOT BOLT ASSYS./ STABILIZERS

1-1/2” Door Stabilizer

P/N: ZT-517-BR/AL

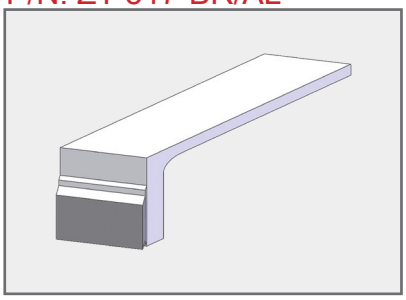

CODES	
AAR JOB	6499
GROUP	
QUALIFIER	
CONDITION	1
PART CODE	XOT

X-REF

DOOR PARTS ► ROLLER ASSYS. & COMPONENTS

Outer 'J' Cover Plate
P/N: ZT-692

CODES	
AAR JOB	6138
GROUP	
QUALIFIER	
CONDITION	1
PART CODE	

X-REF
DR-5001 73224 D-275-2002 D-275-2002

Inner 'J' Cover Plate
P/N: ZT-693

CODES	
AAR JOB	6138
GROUP	
QUALIFIER	
CONDITION	1
PART CODE	

X-REF
DR-1004-02 73872 D-275-2003 D-275-2003

(BL/AR)

Inner 'J' Cover Plate
P/N: ZT-694

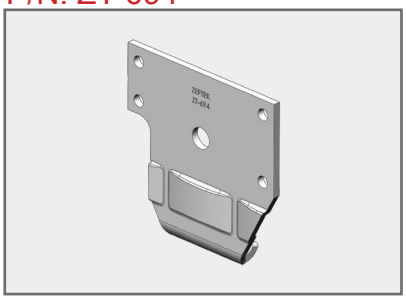

CODES	
AAR JOB	6138
GROUP	
QUALIFIER	
CONDITION	1
PART CODE	

X-REF
DR-1005-02 73872.01 D-275-2004 D-275-2004

(BR/AL)

Outer 'J' Cover Plate 'No Lube'
P/N: ZT-352

CODES	
AAR JOB	6138
GROUP	
QUALIFIER	
CONDITION	1
PART CODE	

X-REF

Inner 'J' Cover Plate 'No Lube'
P/N: ZT-353

CODES	
AAR JOB	6138
GROUP	
QUALIFIER	
CONDITION	1
PART CODE	

X-REF

(BL/AR)

Inner 'J' Cover Plate 'No Lube'
P/N: ZT-354

CODES	
AAR JOB	6138
GROUP	
QUALIFIER	
CONDITION	1
PART CODE	

X-REF

(BR/AL)

Roller Assy.
P/N: ZT-785

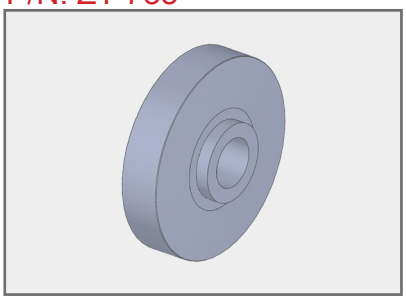

CODES	
AAR JOB	6139
GROUP	
QUALIFIER	
CONDITION	1
PART CODE	

X-REF
PN2779.1 73221 DC002001 DC002001

Steel w/ Bearing

Roller Assy.
P/N: DR-1001A

CODES	
AAR JOB	6139
GROUP	
QUALIFIER	
CONDITION	1
PART CODE	

X-REF

Steel w/ Bearing, Axle & Grease Zerk

DOOR PARTS ► ROLLER ASSYS. & COMPONENTS

Roller, Assy. Perm. Greased
P/N: 3001DR

CODES	
AAR JOB	6139
GROUP	
QUALIFIER	
CONDITION	1
PART CODE	

X-REF
73222.01 D-203-80002

ABL, Wide Roller w/Axle

Roller, Assy. Perm. Greased
P/N: 2001DR

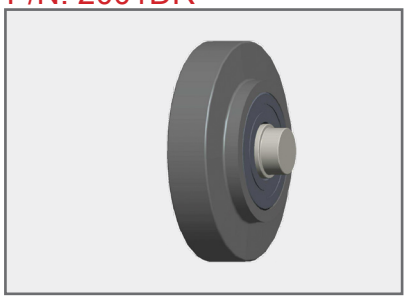

CODES	
AAR JOB	6139
GROUP	
QUALIFIER	
CONDITION	1
PART CODE	

X-REF
73222.02 D-203-2000 PN2780 PN2780

w/Axle

Roller Axle w/ Zerk
P/N: ZT-796

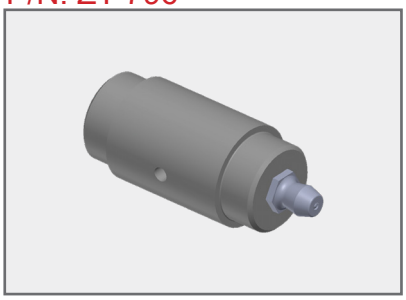

CODES	
AAR JOB	6139
GROUP	
QUALIFIER	
CONDITION	1
PART CODE	

X-REF
PN2779.2 73222 DC108001 DC108001

Zerk Fitting 1/4” Screw-Type
P/N: ZT-795

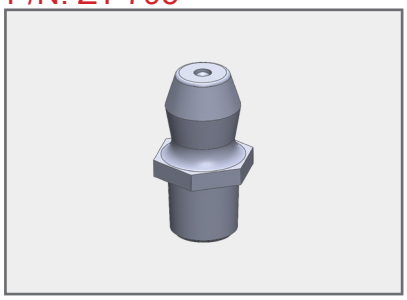

CODES	
AAR JOB	6137
GROUP	
QUALIFIER	
CONDITION	1
PART CODE	

X-REF
69955.3 ML101001

Roller, Double, Complete Assy.
P/N: DR-4001-BL/AR

CODES	
AAR JOB	6136
GROUP	
QUALIFIER	
CONDITION	1
PART CODE	

X-REF
73225 D0120002

Roller, Double, Complete Assy.
P/N: DR-4001-BR/AL

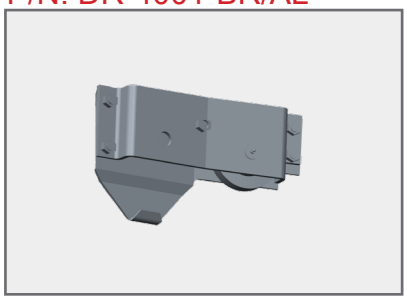

CODES	
AAR JOB	6136
GROUP	
QUALIFIER	
CONDITION	1
PART CODE	

X-REF
73225.1 D0120003

Plate, J-Plate, Double Roller, Front
P/N: DR-4001-01-BL/AR

CODES	
AAR JOB	6138
GROUP	
QUALIFIER	
CONDITION	1
PART CODE	

X-REF
73227 DC116001

Plate, J-Plate, Double Roller, Front
P/N: DR-4001-01-BR/AL

CODES	
AAR JOB	6138
GROUP	
QUALIFIER	
CONDITION	1
PART CODE	

X-REF
73227.1 DC116002

DOOR PARTS ► ROLLER ASSYS. & COMPONENTS

Housing, Inner Door Roller
P/N: DR-1006

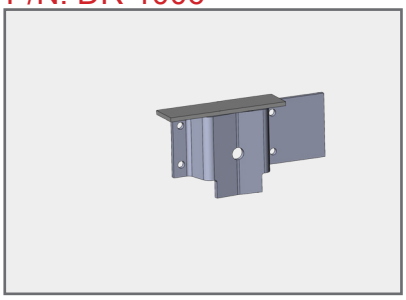

CODES	
AAR JOB	6499
GROUP	
QUALIFIER	
CONDITION	1
PART CODE	XOT

X-REF
73277.3 D0120031

ABL & Seal Safe Door (BR/AL)

Housing, Inner Door Roller
P/N: DR-1007

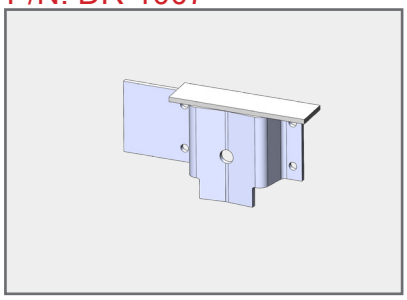

CODES	
AAR JOB	6499
GROUP	
QUALIFIER	
CONDITION	1
PART CODE	XOT

X-REF
73227.31 D0120032

ABL & Seal Safe Door (BL/AR)

Housing, Outer Door Roller
P/N: DR-1008

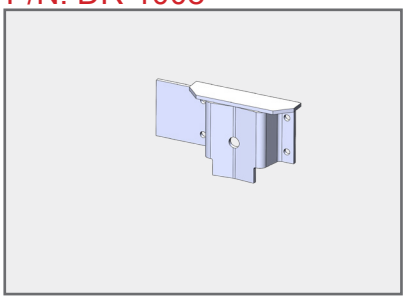

CODES	
AAR JOB	6499
GROUP	
QUALIFIER	
CONDITION	1
PART CODE	XOT

X-REF
73227.32 D0120033

ABL & Seal Safe Door (BR/AL)

Housing, Outer Door Roller
P/N: DR-1009

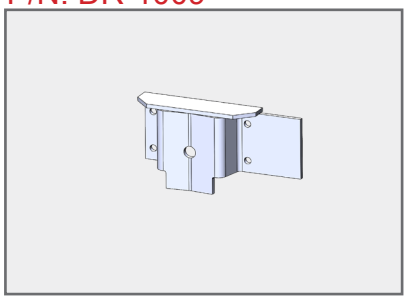

CODES	
AAR JOB	6499
GROUP	
QUALIFIER	
CONDITION	1
PART CODE	XOT

X-REF
73227.33 D0120034

ABL & Seal Safe Door (BL/AR)

Roller Assy- Inner BR/AL
P/N: ZT-950-01-BRAL

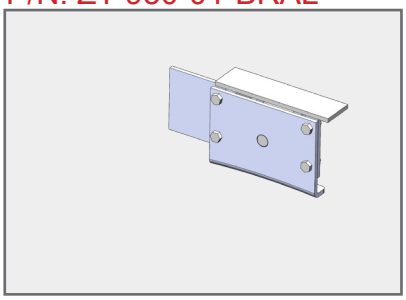

CODES	
AAR JOB	6499
GROUP	
QUALIFIER	
CONDITION	1
PART CODE	

X-REF

Seal Safe Door

Roller Assy- Inner BL/AR
P/N: ZT-950-01-BLAR

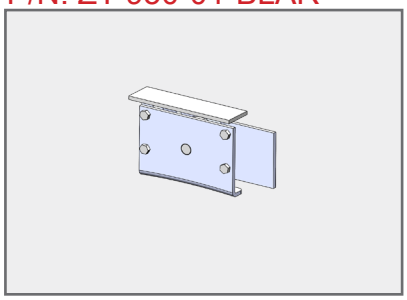

CODES	
AAR JOB	6499
GROUP	
QUALIFIER	
CONDITION	1
PART CODE	

X-REF

Seal Safe Door

Roller Assy- Outer BR/AL
P/N: ZT-950-02-BRAL

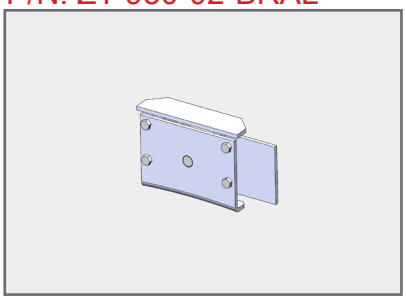

CODES	
AAR JOB	6499
GROUP	
QUALIFIER	
CONDITION	1
PART CODE	

X-REF

Seal Safe Door

Roller Assy- Outer BL/AR
P/N: ZT-950-02-BLAR

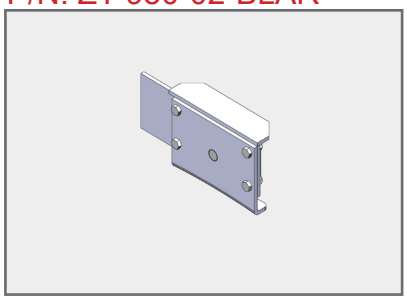

CODES	
AAR JOB	6499
GROUP	
QUALIFIER	
CONDITION	1
PART CODE	

X-REF

Seal Safe Door

DOOR PARTS ► ROLLER ASSYS. & COMPONENTS

Roller Assy.-Single Outer
P/N: ZT-786

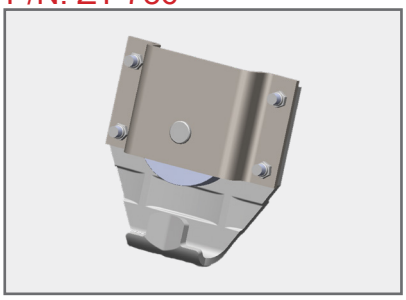

CODES	
AAR JOB	6136
GROUP	
QUALIFIER	
CONDITION	1
PART CODE	

X-REF
DR-5001A 73219 D0120001 D0120001

Roller Assy.-Single Inner
P/N: ZT-787

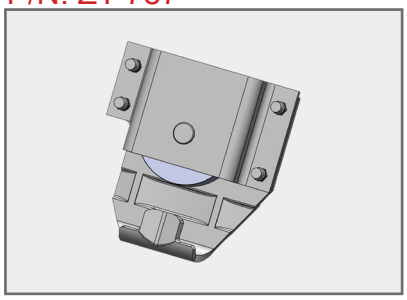

CODES	
AAR JOB	6136
GROUP	
QUALIFIER	
CONDITION	1
PART CODE	

X-REF
DR-1004A 73871 D-076-2002 D-076-2002

(BL/AR)

Roller Assy.-Single Inner
P/N: ZT-788

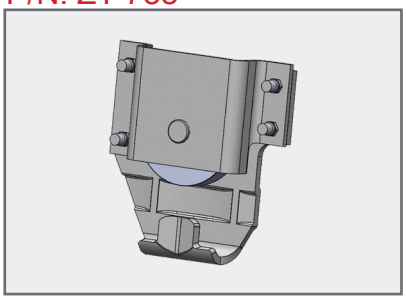

CODES	
AAR JOB	6136
GROUP	
QUALIFIER	
CONDITION	1
PART CODE	

X-REF
DR-1005A 73871.1 D0120010 D0120010

(BR/AL)

Outer Door Roller Housing
P/N: ZT-789

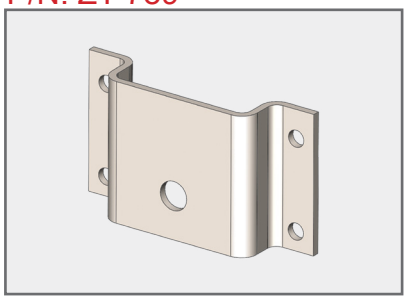

CODES	
AAR JOB	6499
GROUP	
QUALIFIER	
CONDITION	1
PART CODE	XOC

X-REF
DR-5002 73220 D-275-2005 D-275-2005

Inner Door Roller Housing
P/N: ZT-790

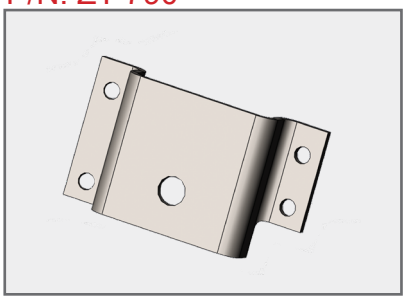

CODES	
AAR JOB	6499
GROUP	
QUALIFIER	
CONDITION	1
PART CODE	XOD

X-REF
DR-1005-01 73870.1 D-275-2001 D-275-2001

(BR/AL)

Inner Door Roller Housing
P/N: ZT-791

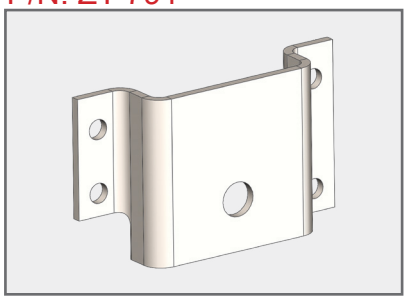

CODES	
AAR JOB	6499
GROUP	
QUALIFIER	
CONDITION	1
PART CODE	XOD

X-REF
DR-1004-01 73870 D-275-2006 D-275-2006

(BL/AR)

Housing, Double Roller, Rear
P/N: DR-4001-02-BL/AR

CODES	
AAR JOB	6499
GROUP	
QUALIFIER	
CONDITION	1
PART CODE	XOC

X-REF
73226 D1200002

Housing, Double Roller, Rear
P/N: DR-4001-02-BR/AL

CODES	
AAR JOB	6499
GROUP	
QUALIFIER	
CONDITION	1
PART CODE	XOC

X-REF
73226.1 D1200001

DOOR PARTS ► ROLLER ASSYS. & COMPONENTS

Housing, Front Door Roller

P/N: DM-1008

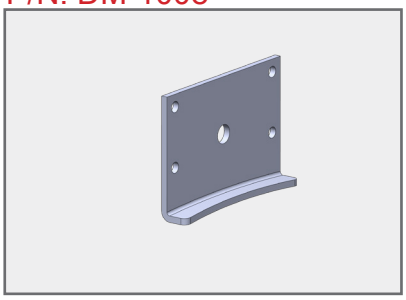

CODES	
AAR JOB	6499
GROUP	
QUALIFIER	
CONDITION	1
PART CODE	XOT

X-REF
73227.2 DC116009

ABL & Seal Safe Door

DOOR PARTS ► TRACK & COMPONENTS

Track Splice
P/N: ZT-729-BL/AR

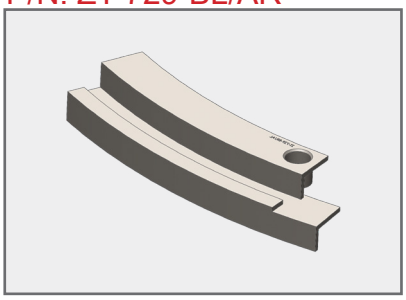

CODES	
AAR JOB	6101
GROUP	
QUALIFIER	
CONDITION	1
PART CODE	
X-REF	

Radial Door

Track Splice
P/N: ZT-729-BR/AL

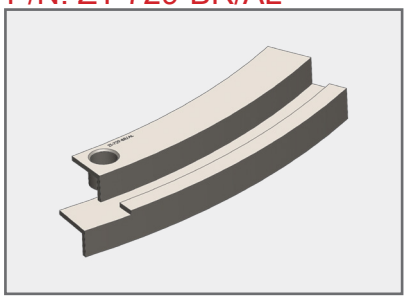

CODES	
AAR JOB	6101
GROUP	
QUALIFIER	
CONDITION	1
PART CODE	
X-REF	

Radial Door

Track Splice
P/N: ZT-892

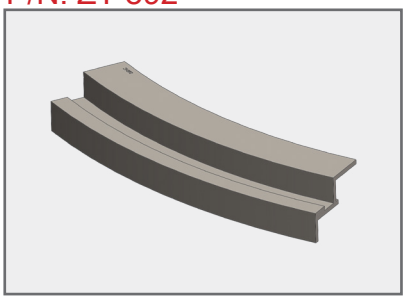

CODES	
AAR JOB	6101
GROUP	
QUALIFIER	
CONDITION	1
PART CODE	
X-REF	

Radial Door, Repair Section

Track Splice
P/N: ZT-736-BL/AR

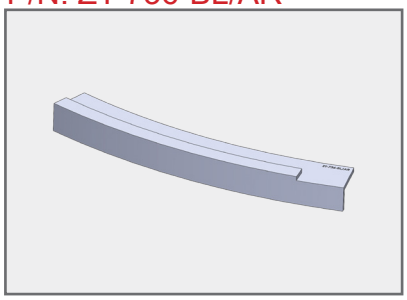

CODES	
AAR JOB	6101
GROUP	
QUALIFIER	
CONDITION	1
PART CODE	
X-REF	

Radial Door, Lower Angle only

Track Splice
P/N: ZT-736-BR/AL

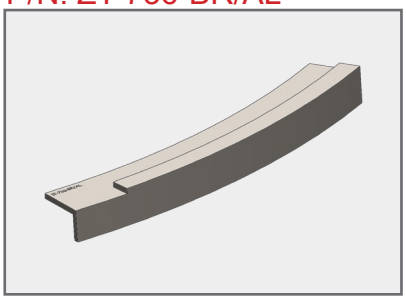

CODES	
AAR JOB	6101
GROUP	
QUALIFIER	
CONDITION	1
PART CODE	
X-REF	

Radial Door, Lower Angle only

U-Shaped Door Track Support Bracket
P/N: ZT-683

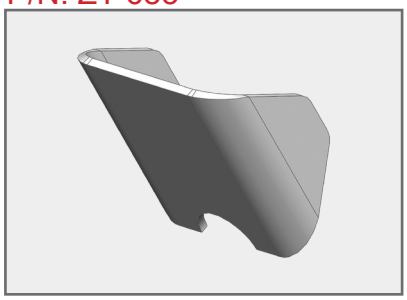

CODES	
AAR JOB	6499
GROUP	
QUALIFIER	
CONDITION	1
PART CODE	XOG
X-REF	

S-Shaped Door Track Support Bracket
P/N: ZT-684

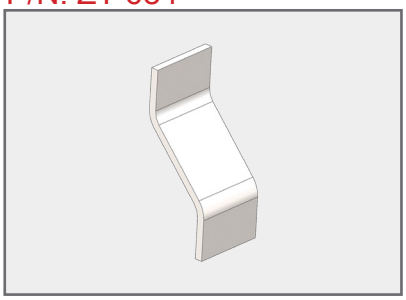

CODES	
AAR JOB	6499
GROUP	
QUALIFIER	
CONDITION	1
PART CODE	XOG
X-REF	

Horseshoe Receiver
P/N: ZT-677

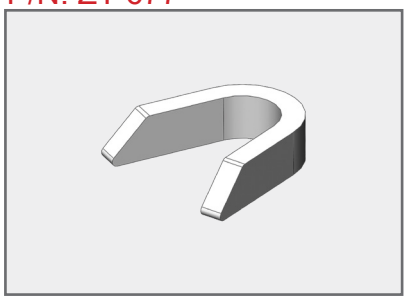

CODES	
AAR JOB	6126
GROUP	
QUALIFIER	
CONDITION	1
PART CODE	
X-REF	DM-1005 73218 D1390001 D1390001

DOOR PARTS ► TRACK & COMPONENTS

Door Track Repair Section
P/N: ZT-864-BL/AR

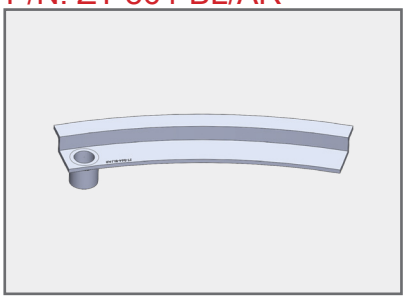

CODES	
AAR JOB	6101
GROUP	
QUALIFIER	
CONDITION	1
PART CODE	

X-REF

Trinity Low Level Raised Sill Flat (ABL & Seal Safe Doors)

Door Track Repair Section
P/N: ZT-864-BR/AL

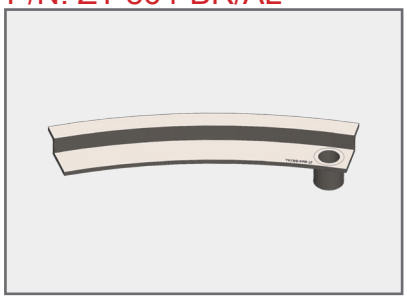

CODES	
AAR JOB	6101
GROUP	
QUALIFIER	
CONDITION	1
PART CODE	

X-REF

Trinity Low Level Raised Sill Flat (ABL & Seal Safe Doors)

Door Track Support Bracket
P/N: ZT-848

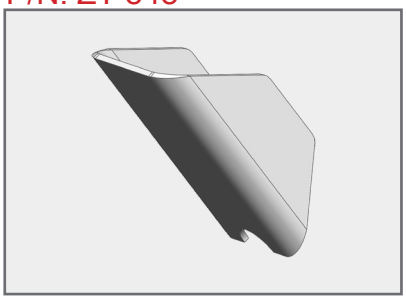

CODES	
AAR JOB	6499
GROUP	
QUALIFIER	
CONDITION	1
PART CODE	XOG

X-REF

Upper Door Track Stop
P/N: ZT-893

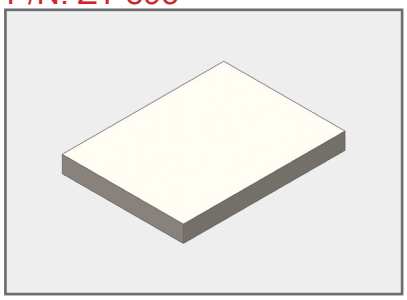

CODES	
AAR JOB	6499
GROUP	
QUALIFIER	
CONDITION	1
PART CODE	XOK

X-REF
DM-1006 73850.12 D1130002 D1130002

Radial Door

Door Track Stop
P/N: ZT-979

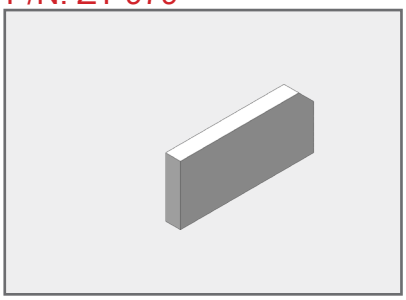

CODES	
AAR JOB	6499
GROUP	
QUALIFIER	
CONDITION	1
PART CODE	XOG

X-REF

For Low Level Raised Sill Flat

DOOR PARTS ► MISC. ASSYS. & COMPS.

Seal
P/N: ZT-599

CODES	
AAR JOB	6499
GROUP	
QUALIFIER	
CONDITION	1
PART CODE	XOT
X-REF	

SealSafe Radial Door, 14’-8.6”

Seal
P/N: ZT-761

CODES	
AAR JOB	6499
GROUP	
QUALIFIER	
CONDITION	1
PART CODE	XOT
X-REF	

SealSafe Radial Door, 14’-2.5”

Seal
P/N: ZT-599-01

CODES	
AAR JOB	6499
GROUP	
QUALIFIER	
CONDITION	1
PART CODE	XOT
X-REF	

SealSafe Radial Door, 15’-4.375” (20’-2”)

Sleeve Spacer
P/N: DM-1007

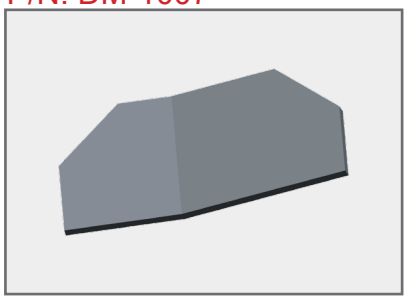

CODES	
AAR JOB	6499
GROUP	
QUALIFIER	
CONDITION	1
PART CODE	XOD
X-REF	73214.1 D1350003

Bar, Anti-Theft
P/N: MA-1001

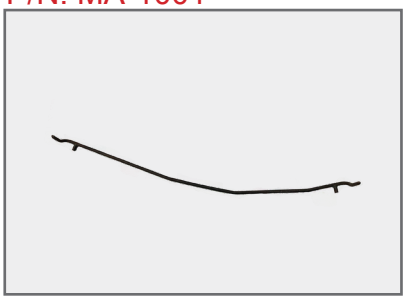

CODES	
AAR JOB	6150
GROUP	
QUALIFIER	
CONDITION	1
PART CODE	
X-REF	73282 M0260011A

(BL/AR)

Bar, Anti-Theft
P/N: MA-1002

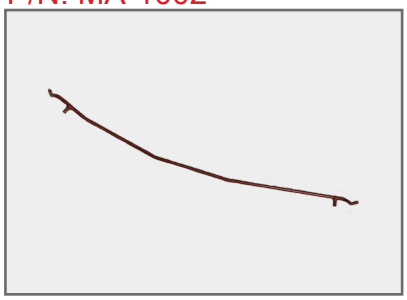

CODES	
AAR JOB	6150
GROUP	
QUALIFIER	
CONDITION	1
PART CODE	
X-REF	73282.1 M0260012A

(BR/AL)

Anti-Vandal Plate
P/N: ZT-827

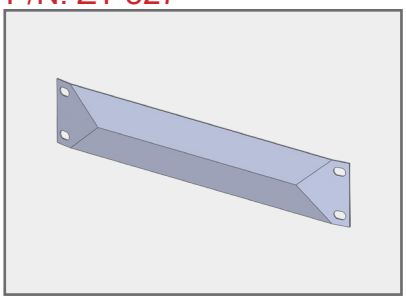

CODES	
AAR JOB	6499
GROUP	
QUALIFIER	
CONDITION	1
PART CODE	XOC
X-REF	73259.11 MM1150308

Strap, Sliding Handbrake Panel Hanger
P/N: DM-1004

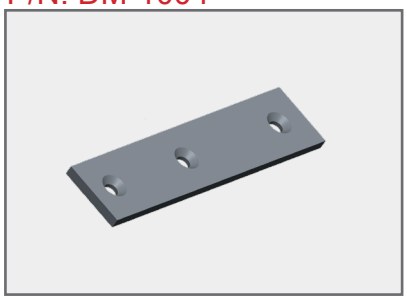

CODES	
AAR JOB	6499
GROUP	
QUALIFIER	
CONDITION	1
PART CODE	XOD
X-REF	73324 D126001

DOOR PARTS ► MISC. ASSYS. & COMPS.

Arm, Pivot

P/N: ZT-882-BL/AR

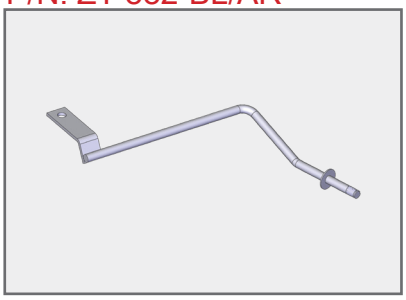

CODES	
AAR JOB	6130
GROUP	
QUALIFIER	
CONDITION	1
PART CODE	XOH

X-REF
73854.3 D0040018WA

Narrow Door

Arm, Pivot

P/N: ZT-882-BR/AL

CODES	
AAR JOB	6130
GROUP	
QUALIFIER	
CONDITION	1
PART CODE	XOH

X-REF
73854.4 D0040019WA

Narrow Door

DOOR PARTS BY DOOR TYPE ► RAVE DOOR

Hanger
P/N: ZT-841

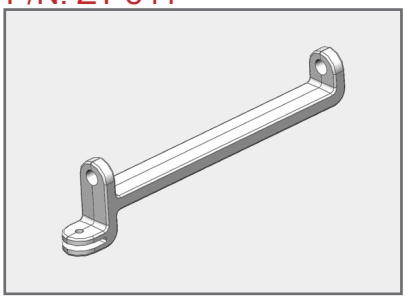

CODES	
AAR JOB	6181
GROUP	
QUALIFIER	
CONDITION	1
PART CODE	

X-REF
DM-1012 73787 212-30120 212-30120

1/4” Hole Old R-108

Hanger
P/N: ZT-842

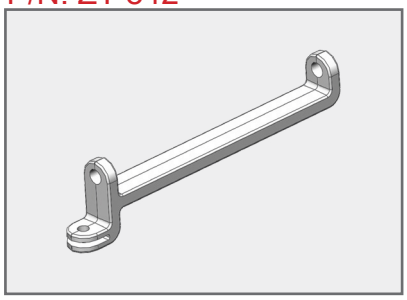

CODES	
AAR JOB	6181
GROUP	
QUALIFIER	
CONDITION	1
PART CODE	

X-REF
DM-1013 73787.1 DC119006 DC119006

3/8” Hole

Hinge Pin
P/N: ZT-843

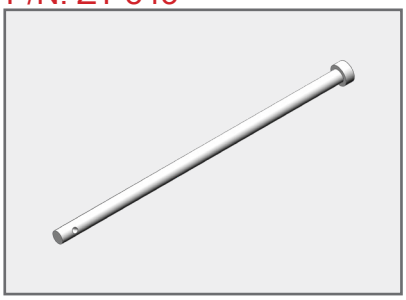

CODES	
AAR JOB	6182
GROUP	
QUALIFIER	
CONDITION	1
PART CODE	

X-REF
PM-1006 73788 MM110043 MM110043

Old R-110

Trolley
P/N: ZT-840

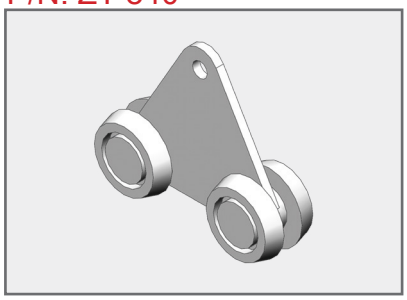

CODES	
AAR JOB	6180
GROUP	
QUALIFIER	
CONDITION	1
PART CODE	

X-REF
RT-1400 73781 DC102006 DC102006

1/4” Hole Old R-111

Trolley
P/N: ZT-840-01

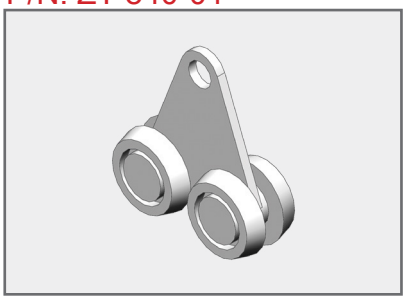

CODES	
AAR JOB	6180
GROUP	
QUALIFIER	
CONDITION	1
PART CODE	

X-REF
RT-1500 73781.1

3/8” Hole

Shoulder Screw
P/N: ZT-894-01

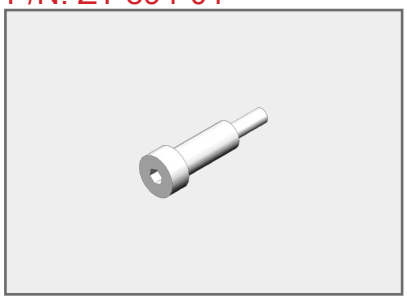

CODES	
AAR JOB	6181
GROUP	
QUALIFIER	
CONDITION	1
PART CODE	

X-REF
52883 CM126007

1/4” x .625” Old R-112

Shoulder Screw
P/N: ZT-894-02

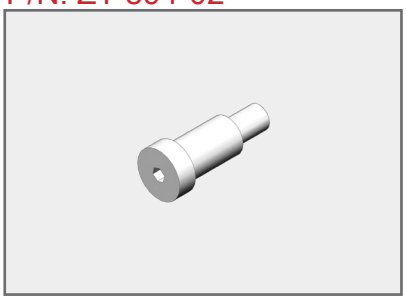

CODES	
AAR JOB	6181
GROUP	
QUALIFIER	
CONDITION	1
PART CODE	

X-REF
52883.1

3/8” x .625”

Shoulder Screw
P/N: ZT-894-03

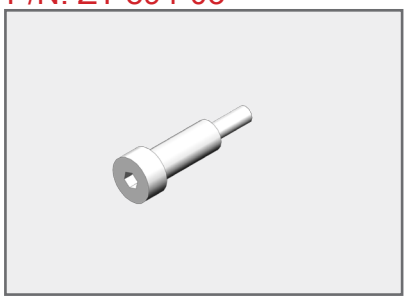

CODES	
AAR JOB	
GROUP	
QUALIFIER	
CONDITION	
PART CODE	

X-REF
52884

1/4” x .750” Old R-114

DOOR PARTS BY DOOR TYPE ► RAVE DOOR

Shoulder Screw
P/N: ZT-894-04

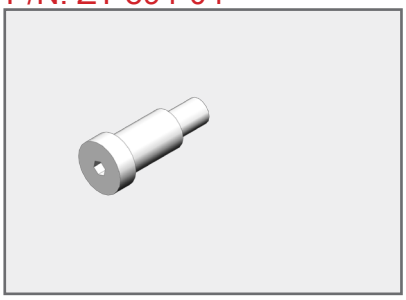

CODES	
AAR JOB	
GROUP	
QUALIFIER	
CONDITION	
PART CODE	
X-REF	52884.1

3/8” x .750”

Nylon Insert Locknut
P/N: ZT-437

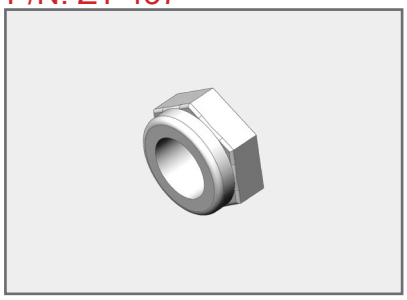

CODES	
AAR JOB	6499
GROUP	
QUALIFIER	
CONDITION	1
PART CODE	XOR
X-REF	55098 CC100044

10-24

Nylon Insert Locknut
P/N: ZT-443

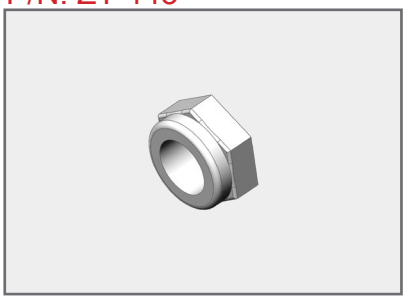

CODES	
AAR JOB	6499
GROUP	
QUALIFIER	
CONDITION	1
PART CODE	XOR
X-REF	

5/16-18

Lock U-Bolt w/ Nuts/Washers
P/N: ZT-839

CODES	
AAR JOB	6499
GROUP	
QUALIFIER	
CONDITION	1
PART CODE	XOP
X-REF	UB-1001 73703 MM001141 MM001141

Old R-144

Bar, Open Lock, Tri-level
P/N: DM-1028

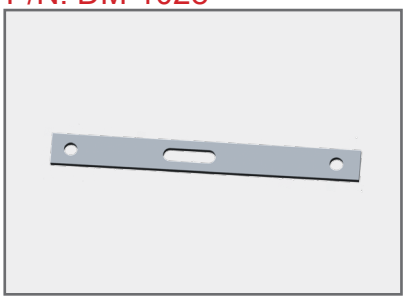

CODES	
AAR JOB	6176
GROUP	
QUALIFIER	
CONDITION	1
PART CODE	
X-REF	73788.2 DD105013

Old R-147

Clip, Cone Lock, Hasp Lock Assy.
P/N: PM-1004

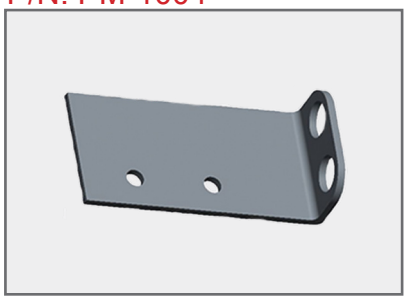

CODES	
AAR JOB	6191
GROUP	
QUALIFIER	
CONDITION	1
PART CODE	
X-REF	73850.83 ME115021

Finger, Guide
P/N: DM-1018

CODES	
AAR JOB	6170
GROUP	
QUALIFIER	
CONDITION	1
PART CODE	
X-REF	73586 212-30119 821-6070 821-6070

(BR/AL) Old R-105 (Panel 2 Thru 7)

Finger, Guide
P/N: DM-1011

CODES	
AAR JOB	6170
GROUP	
QUALIFIER	
CONDITION	1
PART CODE	
X-REF	73586.1 212-30115 821-6060 821-6060

(BL/AR) Old R-104 (Panel 2 Thru 7)

DOOR PARTS BY DOOR TYPE ► RAVE DOOR

Finger, Guide
P/N: DM-1018-01

CODES	
AAR JOB	6170
GROUP	
QUALIFIER	
CONDITION	1
PART CODE	

X-REF
DM100153 821-6090-0

(BR/AL) Old R-107 (Panel 1)

Finger, Guide
P/N: DM-1011-01

CODES	
AAR JOB	6170
GROUP	
QUALIFIER	
CONDITION	1
PART CODE	

X-REF
DM100181 821-6080-0

(BL/AR) Old R-106 (Panel 1)

Hanger, Portec Rave Door End
P/N: DM-1023

CODES	
AAR JOB	6181
GROUP	
QUALIFIER	
CONDITION	1
PART CODE	

X-REF
73656 EM100011

9/32” Hole Old R-109

Hanger, Portec Rave Door End
P/N: DM-1023-A

CODES	
AAR JOB	6181
GROUP	
QUALIFIER	
CONDITION	1
PART CODE	

X-REF
73656.1 10279-168

13/32” Hole

Hinge, 2 Knuckle
P/N: 10157DM

CODES	
AAR JOB	6499
GROUP	
QUALIFIER	
CONDITION	1
PART CODE	XOM

X-REF
73789 DM-10157

Hinge, 3 Knuckle
P/N: 10156DM

CODES	
AAR JOB	6499
GROUP	
QUALIFIER	
CONDITION	1
PART CODE	XOM

X-REF
73789.1 DM-10156

DOOR PARTS BY DOOR TYPE ► RAVE DOOR

Pipe, Joint Sleeves, Weld, Track
P/N: DT-1004

CODES	
AAR JOB	6499
GROUP	
QUALIFIER	
CONDITION	1
PART CODE	XOR

X-REF
73845.7 11486

Plate, Lock, Assy.
P/N: DA-1011

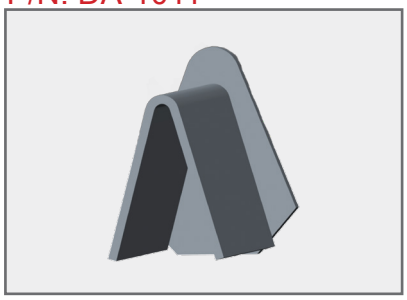

CODES	
AAR JOB	6175
GROUP	
QUALIFIER	
CONDITION	1
PART CODE	

X-REF
73850.8 DM001044

Old R-131

Track
P/N: Straight Track

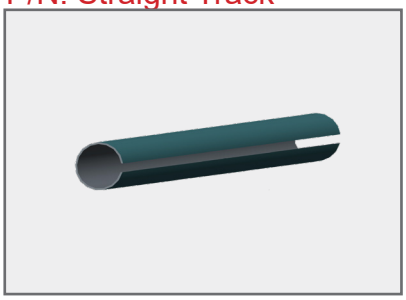

CODES	
AAR JOB	6173
GROUP	
QUALIFIER	
CONDITION	1
PART CODE	

X-REF
73845.12 DC103008

10’-Lg.

Track, Sec “B” Top Track, Curve
P/N: DT-1002

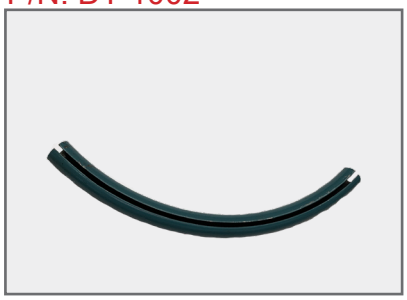

CODES	
AAR JOB	6173
GROUP	
QUALIFIER	
CONDITION	1
PART CODE	

X-REF
73845.2 DC103012 SCCURVE TRACK SCCURVE TRACK

Old B-11402

Track, Front, Track Section
P/N: DT-1001

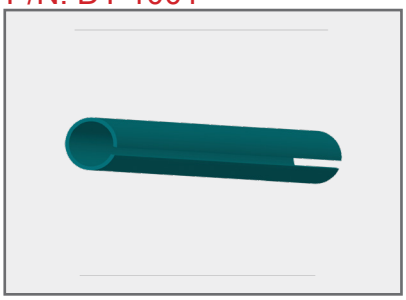

CODES	
AAR JOB	6173
GROUP	
QUALIFIER	
CONDITION	1
PART CODE	

X-REF
73845.3 DC103013

39.94” lg. Old B-11354

Track, Rear
P/N: DT-1003

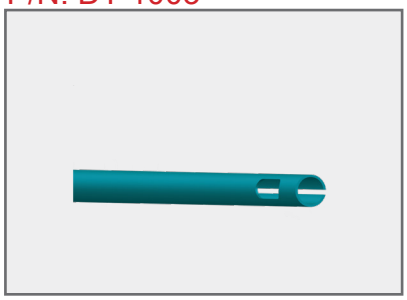

CODES	
AAR JOB	6173
GROUP	
QUALIFIER	
CONDITION	1
PART CODE	

X-REF
73845.1 DC125003

Old B-11356-1

Bar, Open Lock
P/N: DA-1010

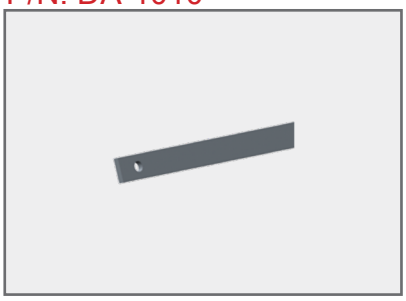

CODES	
AAR JOB	6499
GROUP	
QUALIFIER	
CONDITION	1
PART CODE	XOP

X-REF
73788.1 DD105012

Old R-148

Lock, Handle Assy.
P/N: DM-1027-BL/AR

CODES	
AAR JOB	6175
GROUP	
QUALIFIER	
CONDITION	1
PART CODE	

X-REF
73850.9 DD001024

(BL/AR) Old R-145

DOOR PARTS BY DOOR TYPE ► RAVE DOOR

Lock, Handle Assy.

P/N: DM-1027-BR/AL

CODES	
AAR JOB	6175
GROUP	
QUALIFIER	
CONDITION	1
PART CODE	

X-REF
73850.91

(BR/AL)

DOOR PARTS BY DOOR TYPE ► COMPOSITE TRI-FOLD

Operating Rod Splice
P/N: ZT-850-01-BL/AR

CODES	
AAR JOB	6499
GROUP	
QUALIFIER	
CONDITION	1
PART CODE	XOX
X-REF	

Composite Door, 13-1/4”

Operating Rod Splice
P/N: ZT-850-01-BR/AL

CODES	
AAR JOB	6499
GROUP	
QUALIFIER	
CONDITION	1
PART CODE	XOX
X-REF	

Composite Door, 13-1/4”

Operating Rod Splice
P/N: ZT-850-02-BL/AR

CODES	
AAR JOB	6499
GROUP	
QUALIFIER	
CONDITION	1
PART CODE	XOX
X-REF	

Composite Door, 20-1/4”

Operating Rod Splice
P/N: ZT-850-02-BR/AL

CODES	
AAR JOB	6499
GROUP	
QUALIFIER	
CONDITION	1
PART CODE	XOX
X-REF	

Composite Door, 20-1/4”

Locking Lever Bracket
P/N: ZT-881

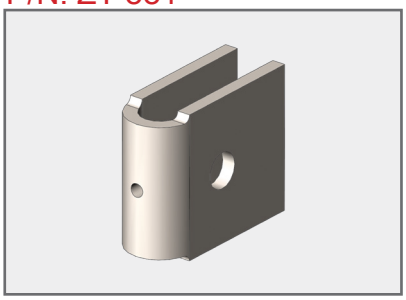

CODES	
AAR JOB	6499
GROUP	
QUALIFIER	
CONDITION	1
PART CODE	XOX
X-REF	

Hole locating Jig
P/N: ZT-835

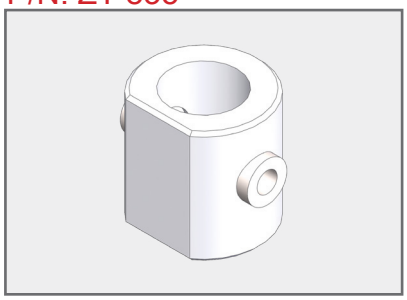

CODES	
AAR JOB	6499
GROUP	
QUALIFIER	
CONDITION	1
PART CODE	XOX
X-REF	

Lower Keeper
P/N: ZT-853

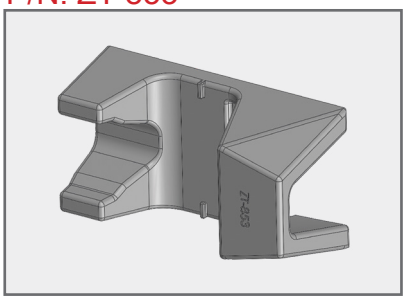

CODES	
AAR JOB	6320
GROUP	
QUALIFIER	
CONDITION	1
PART CODE	XOX
X-REF	121343-00 P42235

Door Keeper Block
P/N: ZT-936

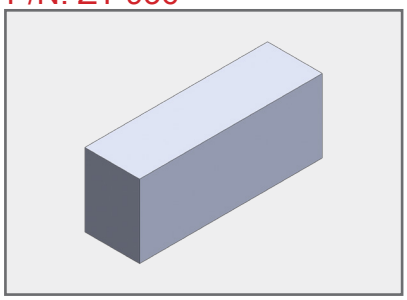

CODES	
AAR JOB	6499
GROUP	
QUALIFIER	
CONDITION	1
PART CODE	XOX
X-REF	

DOOR PARTS BY DOOR TYPE ► COMPOSITE TRI-FOLD

Top Keeper
P/N: ZT-851-BL/AR

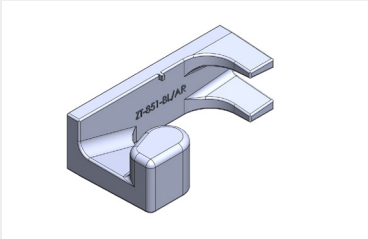

CODES	
AAR JOB	6322
GROUP	
QUALIFIER	
CONDITION	1
PART CODE	XOX
X-REF	

Top Keeper
P/N: ZT-851-BR/AL

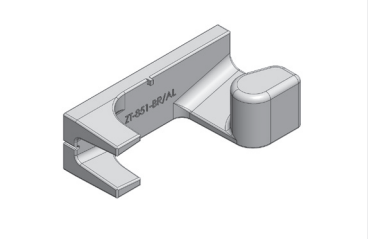

CODES	
AAR JOB	6322
GROUP	
QUALIFIER	
CONDITION	1
PART CODE	XOX
X-REF	

Keeper Support BR/AL
P/N: ZT-969-BR/AL

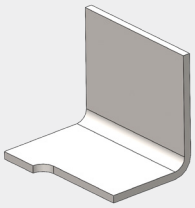

CODES	
AAR JOB	6499
GROUP	
QUALIFIER	
CONDITION	1
PART CODE	XOX
X-REF	101766-02

Multimax, Use w/ ZT-969-01

Keeper Support BL/AR
P/N: ZT-969-BL/AR

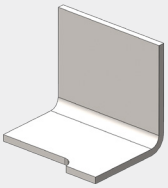

CODES	
AAR JOB	6499
GROUP	
QUALIFIER	
CONDITION	1
PART CODE	XOX
X-REF	101766-01

Multimax, Use w/ ZT-969-01

Keeper Top Support
P/N: ZT-969-01

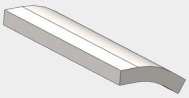

CODES	
AAR JOB	6499
GROUP	
QUALIFIER	
CONDITION	1
PART CODE	XOX
X-REF	100008286

Multimax, Use w/ ZT-969-BRAL & ZT-969-BLAR

Door Keeper Support Plate
P/N: ZT-937

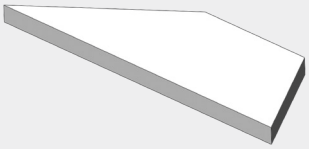

CODES	
AAR JOB	6499
GROUP	
QUALIFIER	
CONDITION	1
PART CODE	XOX
X-REF	100010282

Bottom Cam
P/N: ZT-854-BL/AR

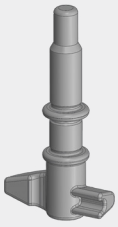

CODES	
AAR JOB	6320
GROUP	
QUALIFIER	
CONDITION	1
PART CODE	
X-REF	P24985

Bottom Cam
P/N: ZT-854-BR/AL

CODES	
AAR JOB	6320
GROUP	
QUALIFIER	
CONDITION	1
PART CODE	
X-REF	P24975

DOOR PARTS BY DOOR TYPE ► COMPOSITE TRI-FOLD

Seal Pin
P/N: ZT-861

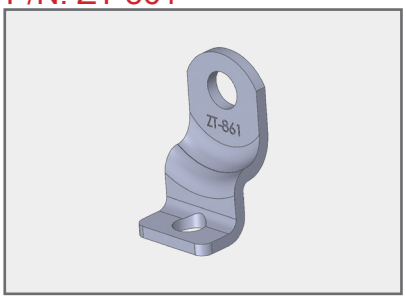

CODES	
AAR JOB	6343
GROUP	
QUALIFIER	
CONDITION	1
PART CODE	

X-REF
121345-00 P44165

Seal Plate
P/N: ZT-862

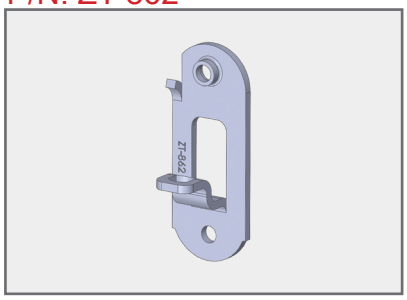

CODES	
AAR JOB	6342
GROUP	
QUALIFIER	
CONDITION	1
PART CODE	

X-REF
121344-00 P40115

Seal Plate - Backer Plate
P/N: ZT-862-01

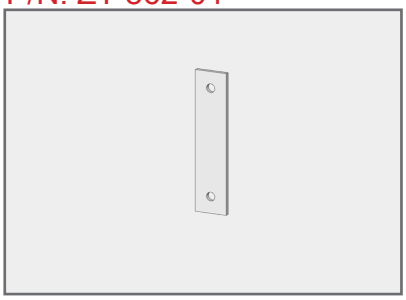

CODES	
AAR JOB	6499
GROUP	
QUALIFIER	
CONDITION	1
PART CODE	XOX

X-REF

Strap
P/N: ZT-927-01

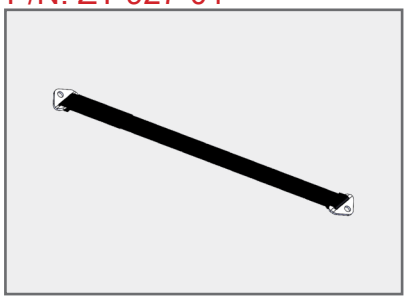

CODES	
AAR JOB	6499
GROUP	
QUALIFIER	
CONDITION	1
PART CODE	XOX

X-REF
100008419

Multimax Door, 24” lg.

Strap
P/N: ZT-927-03

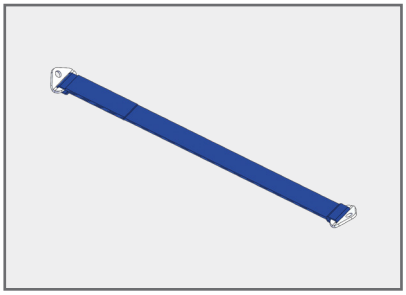

CODES	
AAR JOB	6499
GROUP	
QUALIFIER	
CONDITION	1
PART CODE	XOX

X-REF
100010463

Multimax Door, 25.25” lg.

Door Strap
P/N: ZT-927-02

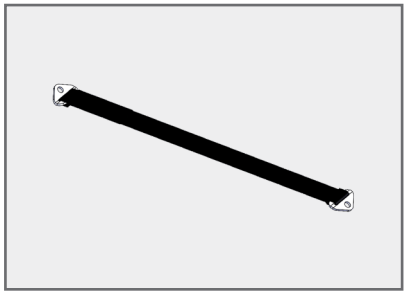

CODES	
AAR JOB	6499
GROUP	
QUALIFIER	
CONDITION	1
PART CODE	XOX

X-REF

Automax, 27.25” lg.

Door Extension Spring
P/N: ZT-926

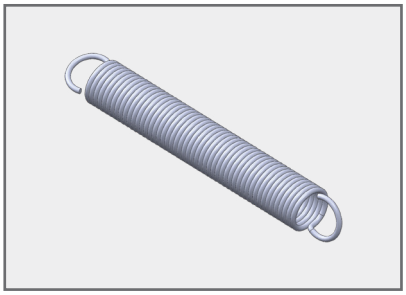

CODES	
AAR JOB	6499
GROUP	
QUALIFIER	
CONDITION	1
PART CODE	XOX

X-REF
161122-00

Automax, Multimax

Door Spring
P/N: ZT-939

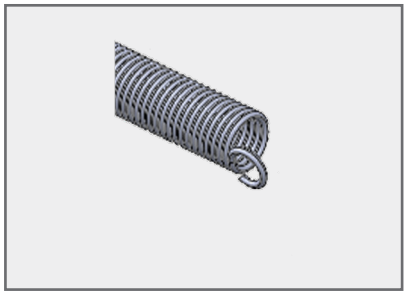

CODES	
AAR JOB	6499
GROUP	
QUALIFIER	
CONDITION	1
PART CODE	XOX

X-REF

Uni-Level

DOOR PARTS BY DOOR TYPE ► COMPOSITE TRI-FOLD

Door Spring Assy.
P/N: ZT-940

CODES	
AAR JOB	6499
GROUP	
QUALIFIER	
CONDITION	1
PART CODE	XOX
X-REF	

Uni-Level (w/ Cable & Coupling)

C-Channel Trim KIT
P/N: ZT-998-KIT

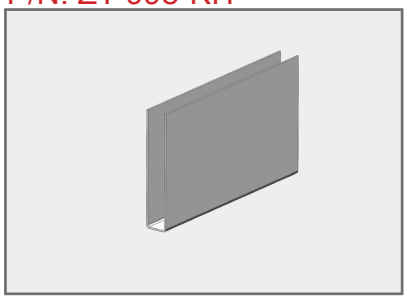

CODES	
AAR JOB	
GROUP	
QUALIFIER	
CONDITION	1
PART CODE	
X-REF	

Multimax

Lower Door Guide Assy.
P/N: ZT-961-L

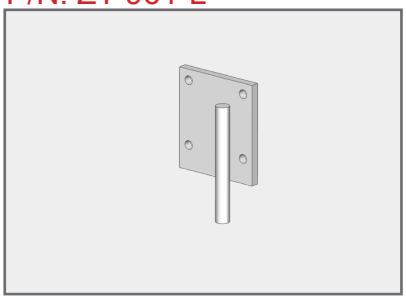

CODES	
AAR JOB	6499
GROUP	
QUALIFIER	
CONDITION	1
PART CODE	XOX
X-REF	

NSC

Lower Door Guide Assy.
P/N: ZT-961-R

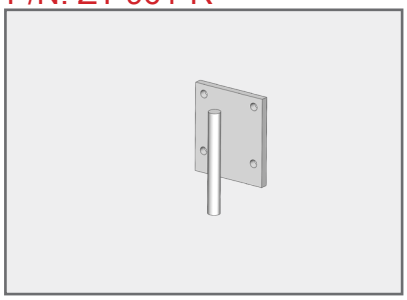

CODES	
AAR JOB	6499
GROUP	
QUALIFIER	
CONDITION	1
PART CODE	XOX
X-REF	

NSC

Spring Latch Pin
P/N: ZT-755

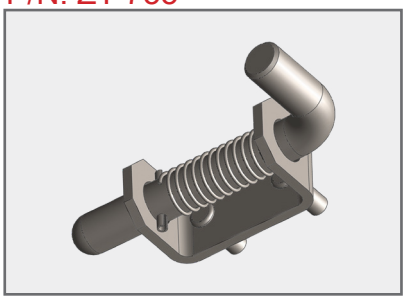

CODES	
AAR JOB	6310
GROUP	
QUALIFIER	
CONDITION	1
PART CODE	
X-REF	100011273

Multimax, Tri-Fold Door

Piano Hinge
P/N: ZT-859

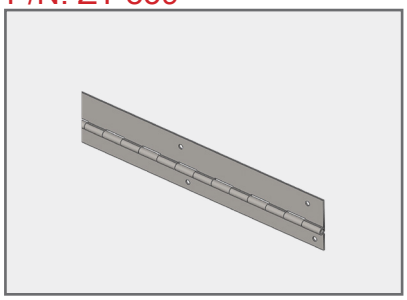

CODES	
AAR JOB	6301
GROUP	
QUALIFIER	
CONDITION	1
PART CODE	
X-REF	102186-00

3” x 2” x 72”

Piano Hinge
P/N: ZT-860

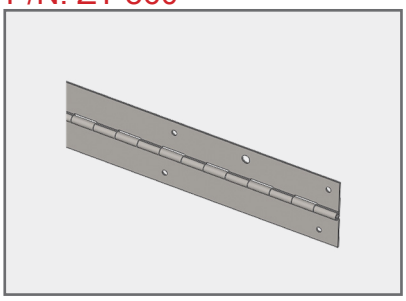

CODES	
AAR JOB	6301
GROUP	
QUALIFIER	
CONDITION	1
PART CODE	
X-REF	102187-00

3” x 3” x 72”

Piano Hinge
P/N: ZT-860-NSC

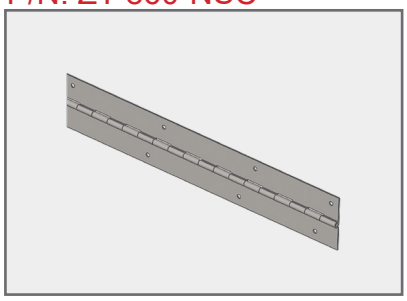

CODES	
AAR JOB	6301
GROUP	
QUALIFIER	
CONDITION	1
PART CODE	
X-REF	

NSC, 3” x 3” x 84”, Universal

DOOR PARTS BY DOOR TYPE ► COMPOSITE TRI-FOLD

Door Pin Assy.

P/N: ZT-908

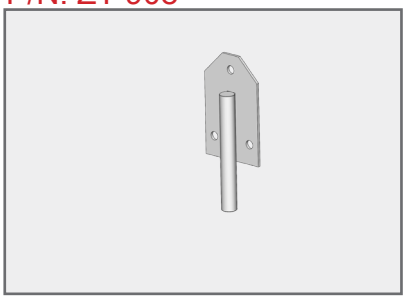

CODES	
AAR JOB	6499
GROUP	
QUALIFIER	
CONDITION	1
PART CODE	XOX

X-REF
A26606-01

Automax, Multimax (Gen 2 & 3 Doors)

DOOR PARTS BY DOOR TYPE ► AVC

Door Lock Cover Plate
P/N: ZT-505-BR/AL

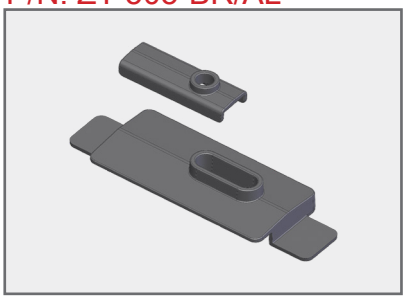

CODES	
AAR JOB	6499
GROUP	
QUALIFIER	
CONDITION	1
PART CODE	XOA
X-REF	

Door Lock Cover Plate
P/N: ZT-505-BL/AR

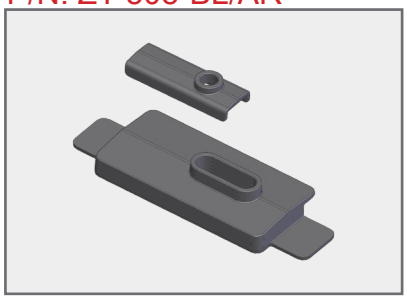

CODES	
AAR JOB	6499
GROUP	
QUALIFIER	
CONDITION	1
PART CODE	XOA
X-REF	

Door Lock Bushing
P/N: ZT-559

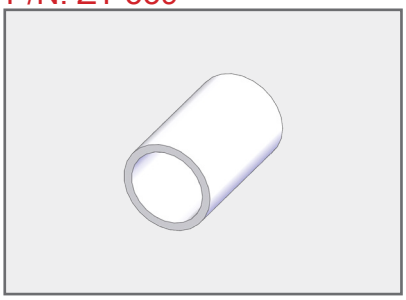

CODES	
AAR JOB	6499
GROUP	
QUALIFIER	
CONDITION	1
PART CODE	XOA
X-REF	

1”Length .515” I.D.

Door Lock Bushing
P/N: ZT-558

CODES	
AAR JOB	6499
GROUP	
QUALIFIER	
CONDITION	1
PART CODE	XOA
X-REF	

3.375” Length .785” I.D.

Lock Actuator Bushing
P/N: ZT-557

CODES	
AAR JOB	6499
GROUP	
QUALIFIER	
CONDITION	1
PART CODE	XOA
X-REF	

1/4” Length 1.365” I.D.

Door Lock Rod Bushing
P/N: ZT-556

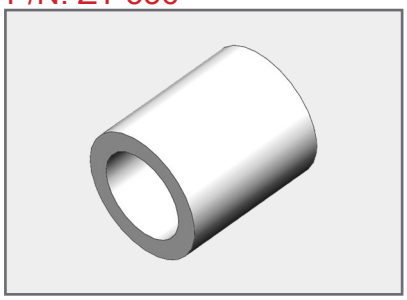

CODES	
AAR JOB	6499
GROUP	
QUALIFIER	
CONDITION	1
PART CODE	XOA
X-REF	

0.438” Length .260” I.D.

Door Support
P/N: ZT-555

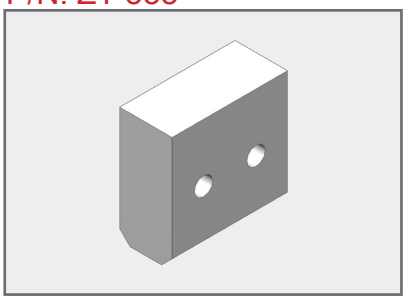

CODES	
AAR JOB	6499
GROUP	
QUALIFIER	
CONDITION	1
PART CODE	XOA
X-REF	

Sleeve, Striker
P/N: ZT-554

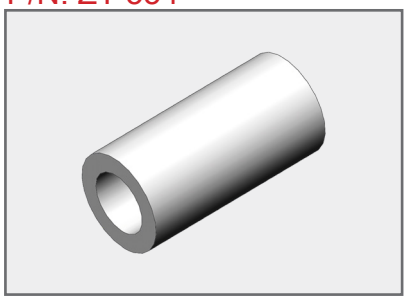

CODES	
AAR JOB	6499
GROUP	
QUALIFIER	
CONDITION	1
PART CODE	XOA
X-REF	

2.50” Length .781” I.D.

DOOR PARTS BY DOOR TYPE ► AVC

Sleeve, Striker

P/N: ZT-553

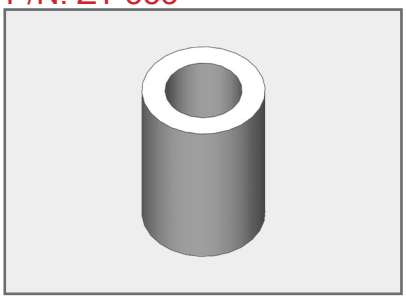

CODES	
AAR JOB	6499
GROUP	
QUALIFIER	
CONDITION	1
PART CODE	XOA

X-REF	

1.75” Length .781” I.D.

Door Lock Bushing

P/N: ZT-552

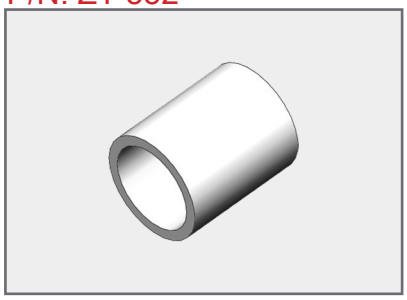

CODES	
AAR JOB	6499
GROUP	
QUALIFIER	
CONDITION	1
PART CODE	XOA

X-REF	

0.75” Length .505” I.D.

Door Bushing

P/N: ZT-551-01

CODES	
AAR JOB	6499
GROUP	
QUALIFIER	
CONDITION	1
PART CODE	XOA

X-REF	

0.75” Length .77” I.D.

DECK PARTS ► PLUGS

Deck Spring Assy.
P/N: ZT-726-01

CODES	
AAR JOB	6640
GROUP	
QUALIFIER	
CONDITION	1
PART CODE	

X-REF
73147.3 MB100007

W&K Rack, 28” x 4.25” O.D.

Deck Spring Assy.
P/N: ZT-726-02

CODES	
AAR JOB	6640
GROUP	
QUALIFIER	
CONDITION	1
PART CODE	

X-REF
DSA-1001 73147.31 F0930001 F0930001

Thrall Rack, 28” x 4.25” O.D.

Deck Spring Assy.
P/N: ZT-726-03

CODES	
AAR JOB	6640
GROUP	
QUALIFIER	
CONDITION	1
PART CODE	

X-REF
DSA-2001 73147.32 MB100086 MB100086

Paragon Rack, 22” x 4” O.D.

Deck Spring Assy.
P/N: ZT-726-06

CODES	
AAR JOB	6640
GROUP	
QUALIFIER	
CONDITION	1
PART CODE	

X-REF
100014660

Multimax Rack, 50.75” x 4” O.D.

Lift Adjustment Bar
P/N: ZT-884

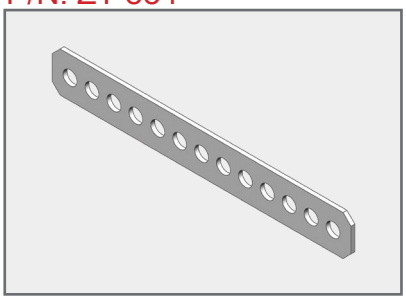

CODES	
AAR JOB	6499
GROUP	
QUALIFIER	
CONDITION	1
PART CODE	XTC

X-REF

Lateral Guard
P/N: ZT-885

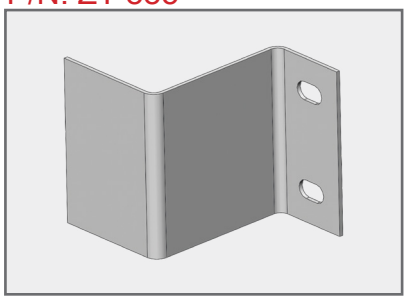

CODES	
AAR JOB	6499
GROUP	
QUALIFIER	
CONDITION	1
PART CODE	XTC

X-REF

Shackle, Anchor
P/N: ZT-902

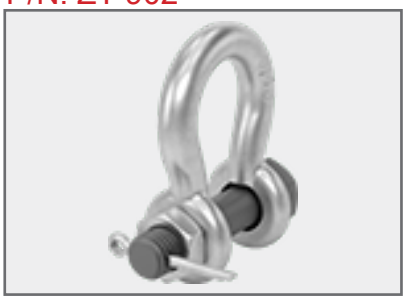

CODES	
AAR JOB	6499
GROUP	
QUALIFIER	
CONDITION	1
PART CODE	XTE

X-REF
73238 CM101002

3/8”

Bolt, Hinge Deck Counterbalance Spring Yoke
P/N: YB-1001

CODES	
AAR JOB	6642
GROUP	
QUALIFIER	
CONDITION	1
PART CODE	

X-REF
73172 CM123001

DECK PARTS ► PLUGS

Bushing, Hinge Deck Lock Pin Receiver
P/N: DA-1014-2

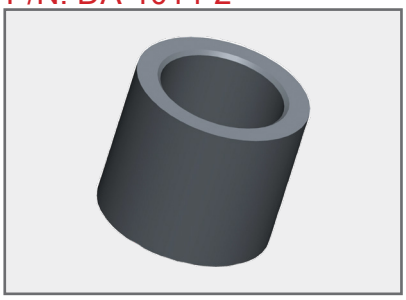

CODES	
AAR JOB	6650
GROUP	
QUALIFIER	
CONDITION	1
PART CODE	

X-REF
73218.1 FD100001

W&K Rack

Cone, Stacking
P/N: SAC-1001

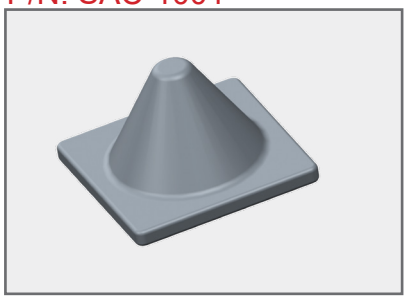

CODES	
AAR JOB	6635
GROUP	
QUALIFIER	
CONDITION	1
PART CODE	

X-REF
73251 MM101005

Tri-Level Rack

Handle, Deck Lock
P/N: DM-1015

CODES	
AAR JOB	6499
GROUP	
QUALIFIER	
CONDITION	1
PART CODE	XZB

X-REF
73846.61 DD105006

Thrall Rack

Hinge Assy., B-Deck
P/N: DH-1001

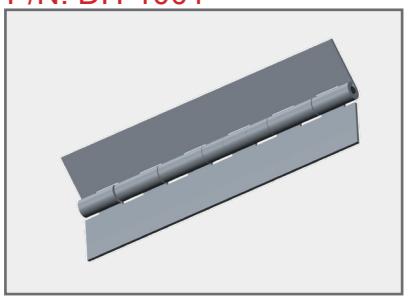

CODES	
AAR JOB	6632
GROUP	
QUALIFIER	
CONDITION	1
PART CODE	

X-REF
73146 FM100063

Paragon Rack

Hinge Assy., B-Deck
P/N: DH-1002

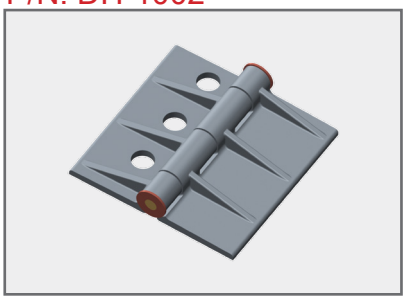

CODES	
AAR JOB	6633
GROUP	
QUALIFIER	
CONDITION	1
PART CODE	

X-REF
73146.1 M0280007

Trinity/ Thrall/ W&K Rack

Lock Pin Retainer Assy.
P/N: DA-1013

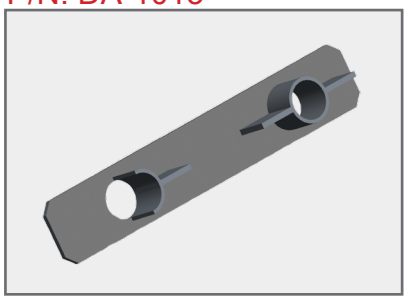

CODES	
AAR JOB	6650
GROUP	
QUALIFIER	
CONDITION	1
PART CODE	

X-REF
73164.5 M0200027

W&K Rack

Pin, Deck Lock
P/N: PM-1002

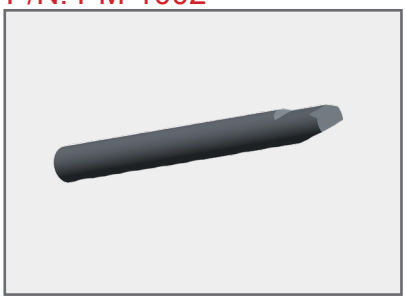

CODES	
AAR JOB	6630
GROUP	
QUALIFIER	
CONDITION	1
PART CODE	

X-REF
73218.13 DD100005

Thrall Rack 1.5” Dia. x 15-9/16”

Spring, Deck Lock
P/N: ZT-949

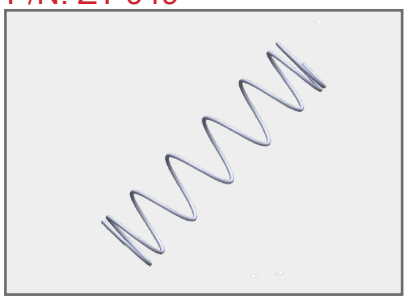

CODES	
AAR JOB	6651
GROUP	
QUALIFIER	
CONDITION	1
PART CODE	

X-REF
73163 M0300074

DECK PARTS ► PLUGS

Deck Lock Plate Assy.

P/N: PM-1003

CODES	
AAR JOB	6652
GROUP	
QUALIFIER	
CONDITION	1
PART CODE	

X-REF
M0300114

DECK PARTS ► PLUGS

Plug Assy.
P/N: ZT-255

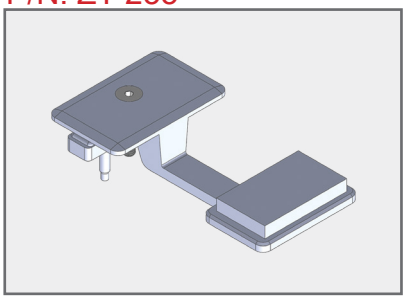

CODES	
AAR JOB	6499
GROUP	
QUALIFIER	
CONDITION	1
PART CODE	XZB

X-REF	

Bi-Level Rack

Plug Assy.
P/N: ZT-355

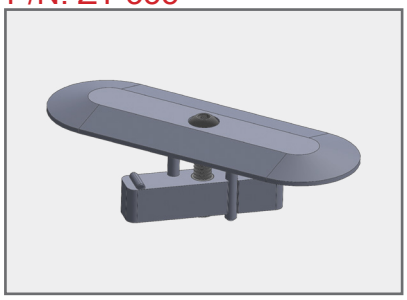

CODES	
AAR JOB	6499
GROUP	
QUALIFIER	
CONDITION	1
PART CODE	XZB

X-REF	

Tri-Level Rack

TOOLS ▶

EdgeGard Button/Fastener Removal Tool
P/N: ZT-233

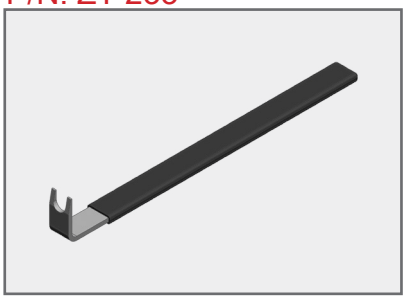

CODES	
AAR JOB	
GROUP	
QUALIFIER	
CONDITION	
PART CODE	
X-REF	

Tape Measure
P/N: ZT-829

CODES	
AAR JOB	
GROUP	
QUALIFIER	
CONDITION	
PART CODE	
X-REF	

Use for Bridgeplate Application

Door Lock Key
P/N: ZT-580-02

CODES	
AAR JOB	
GROUP	
QUALIFIER	
CONDITION	
PART CODE	
X-REF	

Square both ends

Door Lock Key / Seal Breaker
P/N: ZT-580-03

CODES	
AAR JOB	
GROUP	
QUALIFIER	
CONDITION	
PART CODE	
X-REF	

Door Key / Seal Breaker / Hammer
P/N: ZT-580-05

CODES	
AAR JOB	
GROUP	
QUALIFIER	
CONDITION	
PART CODE	
X-REF	

Door Key W/ Hammer
P/N: ZT-580-06

CODES	
AAR JOB	
GROUP	
QUALIFIER	
CONDITION	
PART CODE	
X-REF	

Barrel Ring Fixture
P/N: ZT-1015

CODES	
AAR JOB	
GROUP	
QUALIFIER	
CONDITION	
PART CODE	
X-REF	

MECHANICAL ▶

Air Hose Support Cable
P/N: AH6595

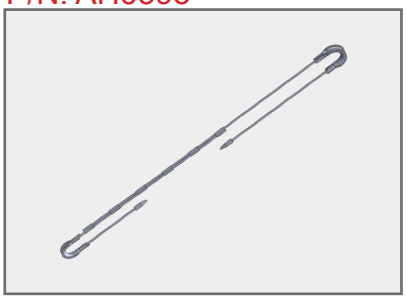

CODES	
AAR JOB	
GROUP	
QUALIFIER	
CONDITION	
PART CODE	
X-REF	

Thimble Each End

Elastomer Air hose Support
P/N: WRAHSE22

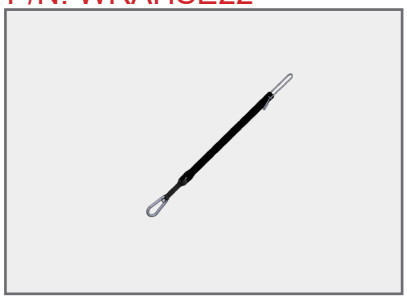

CODES	
AAR JOB	1165
GROUP	
QUALIFIER	
CONDITION	
PART CODE	
X-REF	2485 EHS

Air Hose Support (Chain)
P/N: CC22

CODES	
AAR JOB	
GROUP	
QUALIFIER	
CONDITION	
PART CODE	
X-REF	

Air Hose Support Cable Mechanical
P/N: AH-22

CODES	
AAR JOB	
GROUP	
QUALIFIER	
CONDITION	
PART CODE	
X-REF	

Long Range Uncoupling Lever
P/N: WRULB

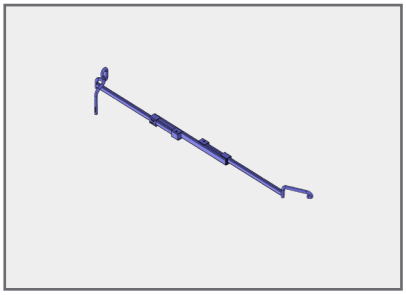

CODES	
AAR JOB	
GROUP	
QUALIFIER	
CONDITION	
PART CODE	
X-REF	CLB

Blue

Short Range Uncoupling Lever
P/N: WRULY

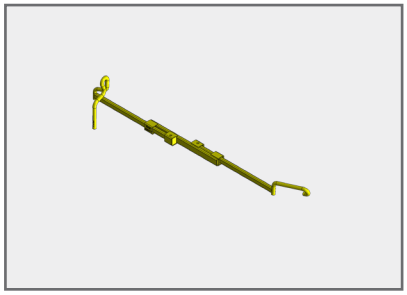

CODES	
AAR JOB	
GROUP	
QUALIFIER	
CONDITION	
PART CODE	
X-REF	CLY

Yellow

Brake Shoe Key
P/N: SE5625

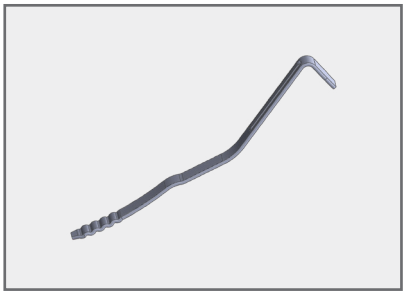

CODES	
AAR JOB	
GROUP	
QUALIFIER	
CONDITION	
PART CODE	
X-REF	2775

Knuckle Pin - C-10
P/N: WABC10

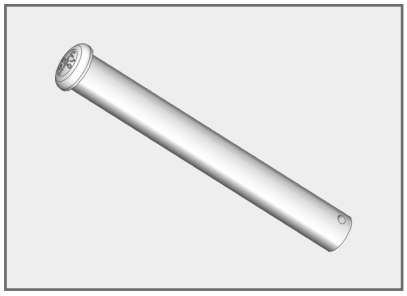

CODES	
AAR JOB	
GROUP	
QUALIFIER	
CONDITION	
PART CODE	
X-REF	5400

MECHANICAL ▶

Bi-Metal Coupler Carrier Wear Plate
P/N: BIM-15

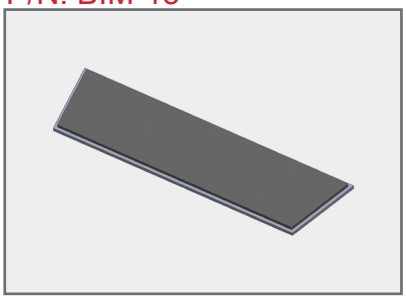

CODES	
AAR JOB	
GROUP	
QUALIFIER	
CONDITION	
PART CODE	
X-REF	

Uncoupling Lever Bracket
P/N: ZT-105

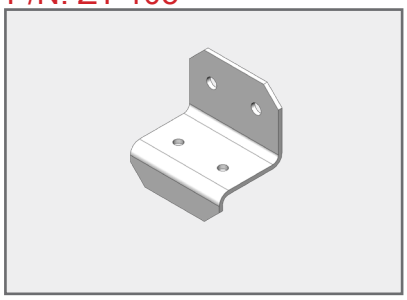

CODES	
AAR JOB	
GROUP	
QUALIFIER	
CONDITION	
PART CODE	
X-REF	

Standard Deck TTX Type Flatcars

Uncoupling Lever Bracket
P/N: ZT-115

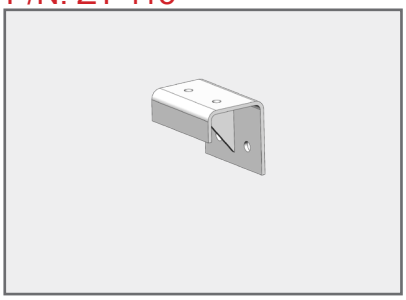

CODES	
AAR JOB	
GROUP	
QUALIFIER	
CONDITION	
PART CODE	
X-REF	

Low Deck TTX Type Flatcars

Uncoupling Lever Clevis
P/N: ZT-104

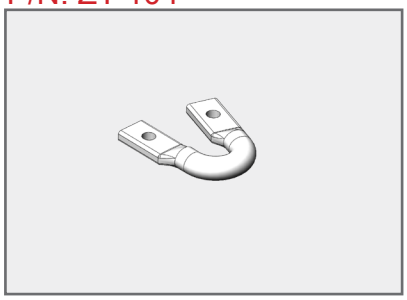

CODES	
AAR JOB	
GROUP	
QUALIFIER	
CONDITION	
PART CODE	
X-REF	

Coupling Link, Hammerlock
P/N: X-293

CODES	
AAR JOB	6499
GROUP	
QUALIFIER	
CONDITION	1
PART CODE	
X-REF	ZT-886

MECHANICAL ▶

Coupler Shank Plug - Two Part Epoxy
P/N: ZT-528

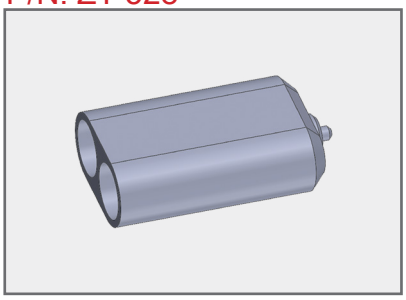

CODES	
AAR JOB	
GROUP	
QUALIFIER	
CONDITION	
PART CODE	
X-REF	

Tube

Coupler Shank Plug - Two Part Epoxy
P/N: ZT-529

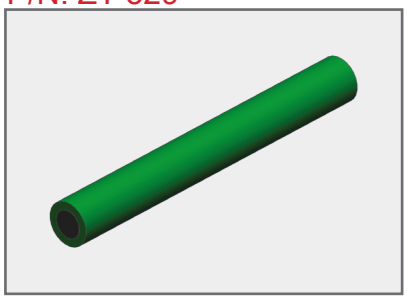

CODES	
AAR JOB	
GROUP	
QUALIFIER	
CONDITION	
PART CODE	
X-REF	

Stick

Coupler Shank Plug - Applicator Gun
P/N: ZT-530

CODES	
AAR JOB	
GROUP	
QUALIFIER	
CONDITION	
PART CODE	
X-REF	

Tube only

Coupler Shank Plug - Metering Head
P/N: ZT-532

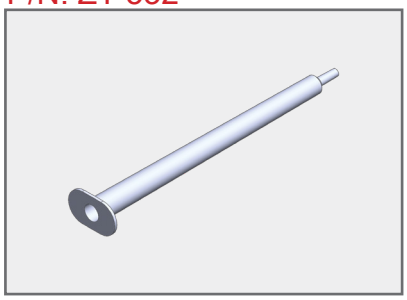

CODES	
AAR JOB	
GROUP	
QUALIFIER	
CONDITION	
PART CODE	
X-REF	

Use with ZT-528

Coupler Shank Plug - Filler Insert
P/N: ZT-527

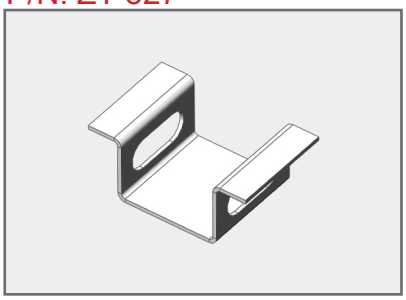

CODES	
AAR JOB	
GROUP	
QUALIFIER	
CONDITION	
PART CODE	
X-REF	

Wabtec CORPORATION

@WabtecCorp

facebook.com/wabtec

© 2020 Wabtec Corp.

6400 Shafer Court, Suite 450
Rosemont, IL 60018
Phone: (412) 825-1000 #1
Email: RackParts@Wabtec.com
Web: www.wabtec.com